correspondence address

HeBlad - UK
The Balance, 7th floor, Pinfold Street
S1 2GU Sheffield, South Yorkshire
T. 0114 352 0110
info@HeBlad.co.uk
www.HeBlad.co.uk

head office address

HeBlad BV
Diamantweg 22
NL - 5527 LC Hapert

Productmap

Click on a product for more information.

Table tennis tables

- PP.GR Concrete Ping-pong table green
- PP.AR.GR Concrete Ping-pong table green, rounded
- PP.R.GR Concrete Ping-pong table green, round
- PP.BL Concrete Ping-pong table blue
- PP.AR.BL Blue table tennis table, rounded
- PP.R.BL Concrete Ping-pong table blue, round
- PP.A Concrete Ping-pong table anthracite
- PP.AR.A Concrete Ping-pong table anthracite, rounded
- PP.R.A Round Ping-Pong table Anthracite
- PP.AB Ping-pong table Anthracite-Concrete
- PP.AR.AB Ping-pong table rounded, Anthracite-Concrete
- PP.R.AB Round Ping-Pong table Anthracite-Concrete
- PP.NT Ping-pong table in natural concrete
- PP.AR.NT Ping-pong table rounded, Natural Concrete
- PP.R.NT Round Ping-pong table in Natural Concrete
- PP.AR.LOW.GR Ping pong table low, rounded Green
- PP.AR.LOW.BL Ping pong table low, rounded Blue
- PP.AR.LOW.A Ping pong table low, rounded Anthracite
- OP.PP Concrete base plate for tennis table
- OP.PP.AB Concrete base plate for tennis table Anthracite-Concrete
- OV.PP.SET A set of support blocks for different tables
- HB.Repair.PP.GR Repair Kit table tennis green
- HB.Repair.PP.BL Repair kit ping pong table Blue

Foot Volleyball

- VV.GR Concrete Foot Volleyball Table Green
- VV.BL Concrete Foot Volleyball Table Blue
- VV.A Concrete Foot Volleyball Table Anthracite
- VV.NT Foot Volleyball Table Natural Concrete
- VV.AB Foot Volleyball Table Anthracite-Concrete

Table Football

- HB.FB.A Concrete Table Football Table

Gaming table

- BB.CH Chess Bench, Natural Concrete
- GT.CH.2 Chess Table Natural Concrete (2P)
- GT.CH.4 Chess Table Natural Concrete (4P)

Our products are delivered from our factory in the Netherlands.

correspondence address

HeBlad - UK
The Balance, 7th floor, Pinfold Street
S1 2GU Sheffield, South Yorkshire
T. 0114 352 0110
info@HeBlad.co.uk
www.HeBlad.co.uk

head office address

HeBlad BV
Diamantweg 22
NL - 5527 LC Hapert

- BB.CH.AB Chess Bench, Anthracite-Concrete
- GT.CH.AB2 Chess Table Anthracite-Concrete (2P)
- GT.CH.AB4 Chess Table Anthracite-Concrete (4P)
- BB.BG Backgammon Bench, Natural Concrete
- GT.BG.2 Backgammon Table Natural Concrete (2P)
- GT.BG.4 Backgammon Table Natural Concrete (4P)
- BB.BG.AB Backgammon Bench, Anthracite-Concrete
- GT.BG.AB2 Backgammon Table Anthracite-Concrete (2P)
- GT.BG.AB4 Backgammon Table Anthracite-Concrete (4P)
- BB.CK Checkers/Drafts Bench, Natural Concrete
- GT.CK.2 Checkers/Drafts Table Natural Concrete (2P)
- GT.CK.4 Checkers/Drafts Table Natural Concrete (4P)
- BB.CK.AB Checkers/Drafts Bench, Anthracite-Concrete
- GT.CK.AB2 Checkers/Drafts Table Anthracite-Concrete (2P)
- GT.CK.AB4 Checkers/Drafts Table Anthracite-Concrete (4P)
- GT.LD.4 Ludo Game Table Naturel Concrete (4P)
- GT.LD.AB4 Ludo Game Table Anthracite-Concrete (4P)
- PS.ST.GT.132 Multi Gaming table (1-3-2) Standard
- PS.ST.GT.134 Multi Gaming table (1-3-4) Standard
- GT.CH.Pieces Set of chessmen
- PS.STAB.GT.132 Multi Gaming table (1-3-2) Standard Anthracite-Concrete
- PS.STAB.GT.134 Multi Gaming table (1-3-4) Standard Anthracite-concrete
- GT.CK.Pieces Set of checkers/drafts
- PS.DL.GT.132 Multi Gaming table (1-3-2) DeLuxe
- PS.DL.GT.134 Multi Gaming table (1-3-4) DeLuxe
- GT.BG.pieces Backgammon stones and dice
- PS.DLAB.GT.132 Multi Gaming table (1-3-2) DeLuxe Anthracite-Concrete
- PS.DLAB.GT.134 Multi Gaming table (1-3-4) DeLuxe Anthracite-Concrete
- PS.DL.GT.111 Multi Gaming table (1-1-1) DeLuxe

Picnic tables

- PS.ST Picnic table Standard Natural Concrete
- PS.ST.AB Picnic table Standard Anthracite-Concrete
- PS.ST.A Concrete Picnic table Standard Anthracite
- PS.DL Picnic table DeLuxe
- PS.DL.AB Picnic table DeLuxe Anthracite-Concrete
- PS.DL.A Concrete Picnic table DeLuxe Anthracite
- PS.ST.OV Picnic table Standard Oval Natural Concrete
- PS.STAB.OV Picnic table Standard Oval Anthracite-Concrete
- PS.STA.OV Concrete Picnic table Standard Oval Anthracite
- PS.DL.OV Picnic table DeLuxe Oval Natural Concrete
- PS.DLAB.OV Picnic table DeLuxe Oval Anthracite-Concrete

Our products are delivered from our factory in the Netherlands.

correspondence address

HeBlad - UK
The Balance, 7th floor, Pinfold Street
S1 2GU Sheffield, South Yorkshire
T. 0114 352 0110
info@HeBlad.co.uk
www.HeBlad.co.uk

head office address

HeBlad BV
Diamantweg 22
NL - 5527 LC Hapert

- PS.DLA.OV Concrete Picnic table DeLuxe Oval Anthracite
- PS.DL.RT Picnic table DeLuxe Natural Concrete Wheelchair accessible
- PS.DLAB.RT Picnic table DeLuxe Anthracite-Concrete Wheelchair accessible
- PS.DLA.RT Concrete Picnic table DeLuxe Anthracite Wheelchair accessible
- PS.ST.RT Picnic table Standard Natural Concrete Wheelchair accessible
- PS.STAB.RT Picnic table Standard Anthracite-Concrete Wheelchair accessible
- PS.STA.RT Concrete Picnic table Standard Anthracite Wheelchair accessible
- PS.ST.XL Picnic table Standard XL Natural Concrete
- PS.STAB.XL Picnic table Standard XL Anthracite-Concrete
- PS.STA.XL Concrete Picnic table Standard XL Anthracite
- OP.PS Bottom plate Picnic table Natural Concrete
- OP.PS.AB Bottom plate Picnic table Anthracite-Concrete
- HB.ST High Table Natural Concrete
- HB.ST.AB High Table Anthracite-Concrete
- HB.ST.A Concrete High Table Anthracite

Benches

- BB.ST.OV Bench natural concrete oval
- BB.STAB.OV Bench standard oval anthracite-concrete
- BB.STA.OV Bench standard oval anthracite
- BB.DL.OV Bench DeLuxe Oval Natural Concrete
- BB.DLAB.OV Bench DeLuxe Oval Anthracite-Concrete
- BB.DLA.OV Concrete Bench DeLuxe Oval Anthracite
- BB.ST Bench Standard Natural Concrete
- BB.ST.AB Bench Standard Anthracite-Concrete
- BB.ST.A Concrete Bench Standard Anthracite
- BB.DL Bench DeLuxe Natural Concrete
- BB.DL.AB Bench DeLuxe Anthracite-Concrete
- BB.DL.A Concrete Bench DeLuxe Anthracite
- BB.DL.ML Bench DeLuxe with backrest Natural Concrete
- BB.DLAB.ML Bench DeLuxe with backrest Anthracite-Concrete
- BB.DLA.ML Concrete bench DeLuxe with backrest Anthracite
- BB.DL.OP Bench DeLuxe with bottom plate and backrest Naural Concrete
- BB.DLAB.OP Bench DeLuxe with bottom plate and backrest Anthracite-Concrete
- BB.DLA.OP Concrete bench DeLuxe with bottom plate and backrest Anthracite
- BB.DL.OP.ZL Bench DeLuxe with bottom plate without backrest Natural Concrete
- BB.DLAB.OP.ZL Bench DeLuxe with bottom plate without backrest Anthracite-Concrete
- BB.DLA.OP.ZL Concrete bench DeLuxe with bottom plate without backrest Anthracite
- BB.PB.DUO Parkbench Duo Concrete
- BB.PB.OP Park Bench with bottom plate Natural Concrete
- BB.PBAB.DUO Park Bench Duo anthracite-concrete
- BB.PBAB.OP Park Bench with bottom plate Anthracite-Concrete

Our products are delivered from our factory in the Netherlands.

correspondence address

HeBlad - UK
The Balance, 7th floor, Pinfold Street
S1 2GU Sheffield, South Yorkshire
T. 0114 352 0110
info@HeBlad.co.uk
www.HeBlad.co.uk

head office address

HeBlad BV
Diamantweg 22
NL - 5527 LC Hapert

- BB.CH Chess Bench, Natural Concrete
- BB.CK Checkers/Drafts Bench, Natural Concrete
- BB.CH.AB Chess Bench, Anthracite-Concrete
- BB.CK.AB Checkers/Drafts Bench, Anthracite-Concrete
- OP.BB Bottom plate for all brands of Benches Natural Concrete
- OP.BB.AB Bottom plate for all brands of Benches Anthracite-Concrete

Accessories

- B.S1 Plastic all-weather table tennis paddles in 4 colours
- B.DS.SP Starter package table tennis bats & balls
- B.Z6 Bag with 6 ping-pong balls
- B.S1.pastel Table tennis bats Pastel, set of 4
- B.DS10 box with 10 sets of table tennis bats
- B.DS100 Box of ping-pong balls packed per 100 pieces
- HB.FB.6White Set of 6 table football balls standard white
- HB.FB.25White Bag with 25 table football balls standard white
- HB.FB.DOLL Single football figure available
- HB.FBP.Set Set of football players
- HB.FBSC.set Set of kickers with scoreboard
- HB.FB.Handle Handle
- HB.FB.Handleset Handle, set of 8
- HB.FB.Rod Table football rod
- HB.FB.Rodset Stainless steel rods for football game, set of 8.
- HB.FB.bumper Rubber damper
- HB.FB.Bumperset Set of rubber dampers for football table, 16 pcs.
- HB.FB.Inbus25 Allen wrench of 2.5 mm
- HB.FB.Inbus40 Allen key 4 mm
- GT.CH.Pieces Set of chessmen
- GT.CK.Pieces Set of checkers/drafts
- GT.LD.Pieces Set of pawns with a dice
- GT.BG.pieces Backgammon stones and dice
- HB.FB.eye Eye protector for rods
- HB.FB.Eye.set8 Eyeprotectors set of 8 pieces.
- HB.VS Anchoring set HeBlad Tables
- HB.Paint-7016 1 liter anthracite paint

Our products are delivered from our factory in the Netherlands.

correspondence address

HeBlad - UK
The Balance, 7th floor, Pinfold Street
S1 2GU Sheffield, South Yorkshire
T. 0114 352 0110
info@HeBlad.co.uk
www.HeBlad.co.uk

head office address

Concrete Ping-pong table green

Product code: PP.GR

£ 2,650.00 excl. VAT
(£ 3,180.00 incl. VAT)

This rectangular ping-pong table with a green playing surface is a recreational tournament table for outdoor sport. Because this table is reinforced with double layers of steel (above and below) it resists all wind and weather conditions: good for many years and a lot of joy of playing.

The ping-pong table is moulded in one piece, that means also the “net” in the middle is solid concrete. The playing surface is sprayed in green with a two-component lacquer. The white lining and the “net” are not stickered but solid paint and lacquer.

Our products are delivered from our factory in the Netherlands.

Registred under: HeBlad BV • HM Revenue and Customs • Ruby House 8 • Ruby Place • AB10 1ZP Aberdeen
VAT Number GB381060225 • EORI Number GB381060225000 • Commercial register (NL) 170 66 364
Rabobank De Kempen, Markt 7, 5531 BA Bladel (NL) • BIC RABONL2U • Branch code RABONL2UXXX • IBAN NL 20 RABO 0107530112 GBP

correspondence address

HeBlad - UK
The Balance, 7th floor, Pinfold Street
S1 2GU Sheffield, South Yorkshire
T. 0114 352 0110
info@HeBlad.co.uk
www.HeBlad.co.uk

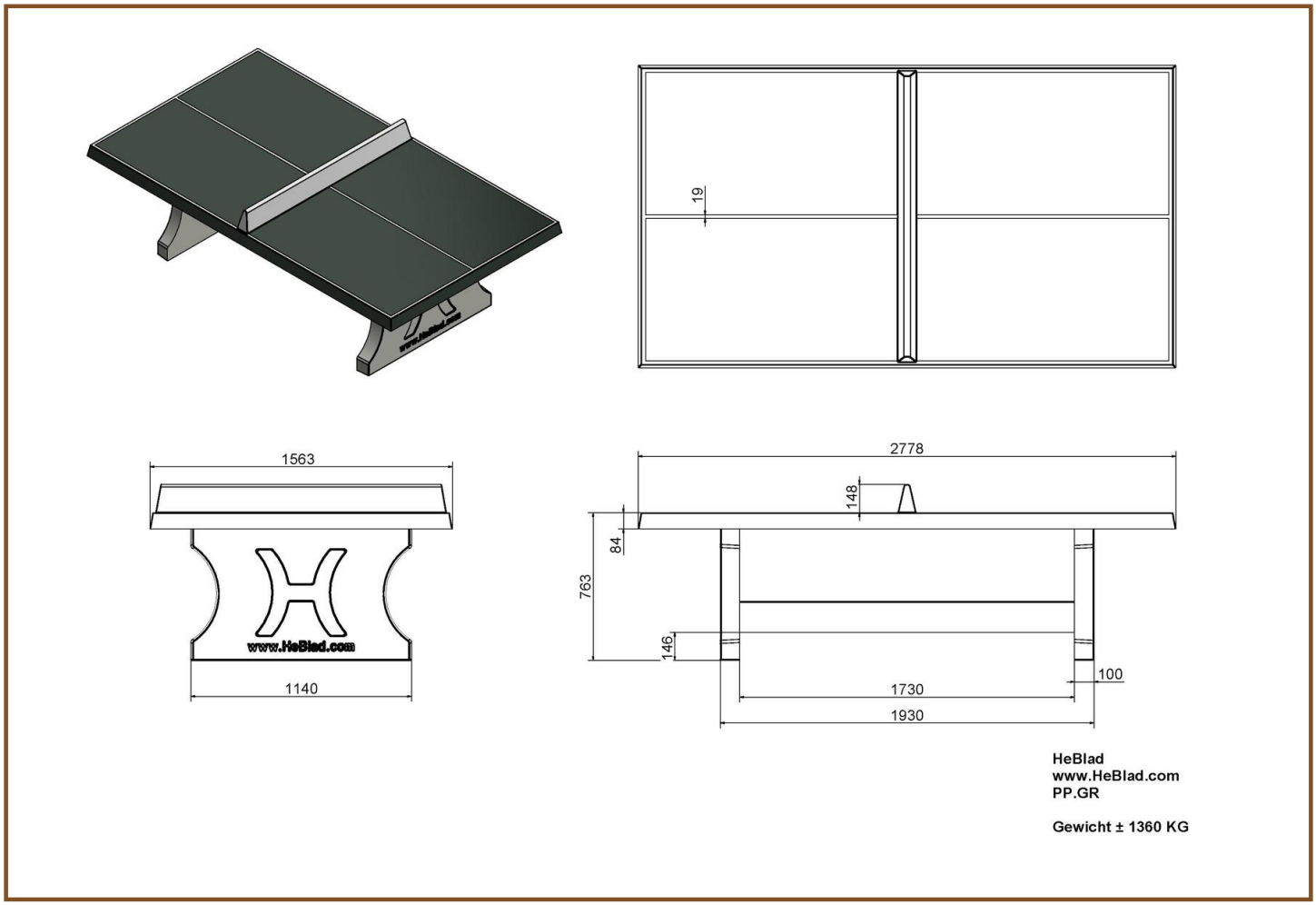

Specifications Concrete Ping-pong table green

Product code	PP.GR	Height tabletop	76 cm
Colour	Groen - RAL 6009	Height of the net	14,75 cm
Dimension playing surface (L x W)	274 x 152 cm	Weight	1360 kg
Dimensions bottom base plate	278 x 156 cm	Distance legs	183 cm (center to center
Tabletop thickness	8,4 cm		

Related products

PP.AR.BL

PP.R.NT

B.S1

OP.PP

B.DS.SP

Our products are delivered from our factory in the Netherlands.

correspondence address

HeBlad - UK
The Balance, 7th floor, Pinfold Street
S1 2GU Sheffield, South Yorkshire
T. 0114 352 0110
info@HeBlad.co.uk
www.HeBlad.co.uk

head office address

Concrete Ping-pong table green, rounded

Product code: PP.AR.GR

£ 2,750.00 excl. VAT
(£ 3,300.00 incl. VAT)

Because this ping-pong table has rounded corners the chance of injury is much less. Young children play a “round the table” without getting hurt at the corners. The green two-component lacquer and the white lining and white “net” gives the table a fresh appearance. This playing equipment is provided with strong double steel layers above and below. This makes the table as strong as iron. In addition to that our tables cannot been dismantled. The table surface, the net and the table legs are one complete unit. Not a single screw is used.

Our products are delivered from our factory in the Netherlands.

12 October 2024 - Prices subject to change

correspondence address

HeBlad - UK
The Balance, 7th floor, Pinfold Street
S1 2GU Sheffield, South Yorkshire
T. 0114 352 0110
info@HeBlad.co.uk
www.HeBlad.co.uk

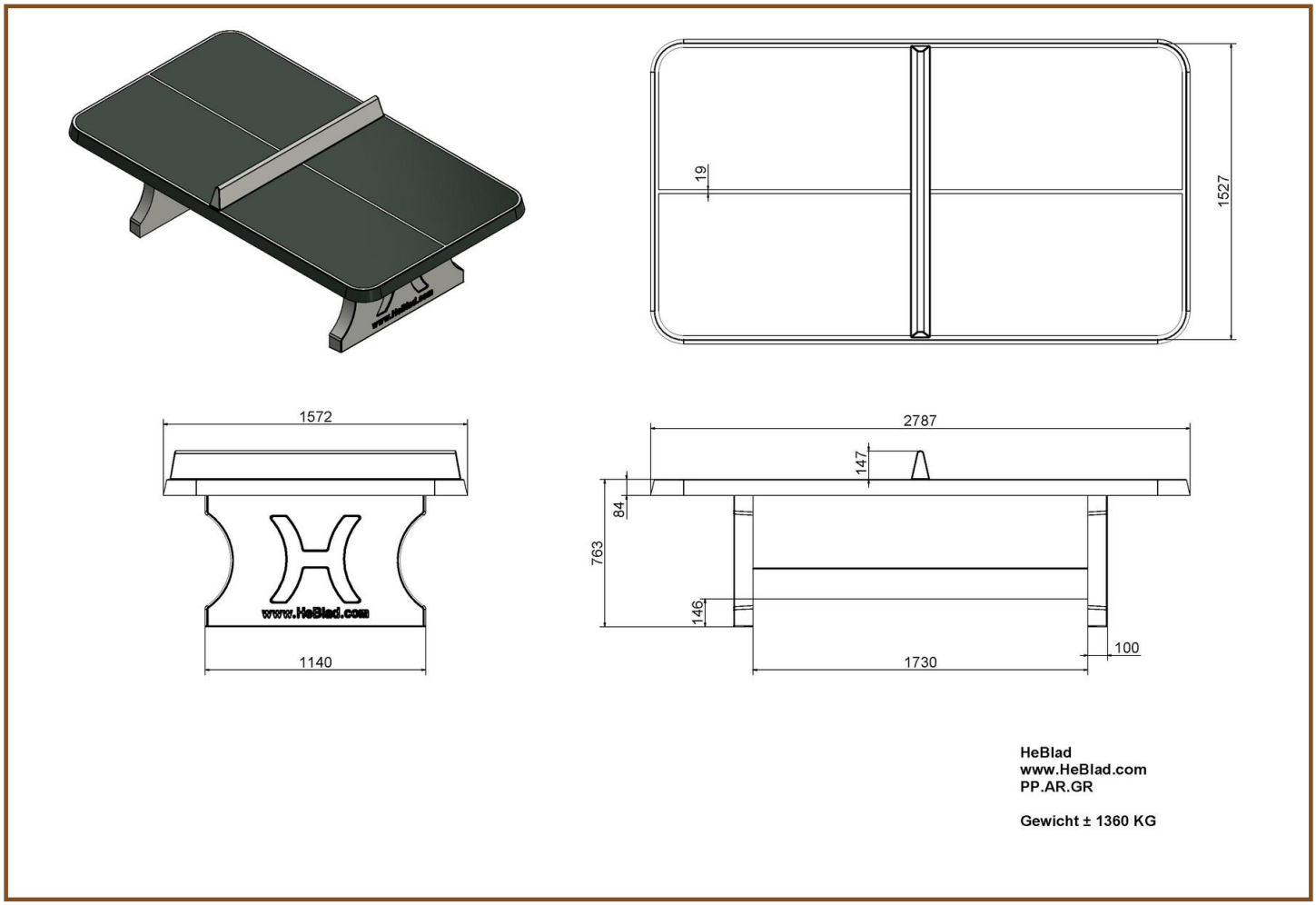

Specifications Concrete Ping-pong table green, rounded

Product code	PP.AR.GR	Height tabletop	76 cm
Colour	Groen - RAL 6009	Height of the net	14,75 cm
Dimension playing surface (L x W)	274 x 152 cm	Weight	1360 kg
Dimensions bottom base plate	279 x 157 cm	Distance legs	183 cm (center to center
Tabletop thickness	8,4 cm		

Related products

PP.BL

PP.R.NT

B.DS10

OP.PP

B.DS.SP

Our products are delivered from our factory in the Netherlands.

correspondence address

HeBlad - UK
The Balance, 7th floor, Pinfold Street
S1 2GU Sheffield, South Yorkshire
T. 0114 352 0110
info@HeBlad.co.uk
www.HeBlad.co.uk

head office address

Concrete Ping-pong table green, round

Product code: PP.R.GR

£ 3,300.00 excl. VAT
(£ 3,960.00 incl. VAT)

Create space on the playing ground, because this extra large, round ping-pong table attracts attention through its beautiful design. With a diameter of 260 cm is almost one and a half times bigger than a normal rectangular table. Suitable for sport and play for up to 8 players. Due to its size this table offers a lot of playing possibilities.

The table is treated with a green two-component lacquer. The middle line and the “net” are in white lacquer. The table is weatherproof and vandal-resistant.

Our products are delivered from our factory in the Netherlands.

Registred under: HeBlad BV • HM Revenue and Customs • Ruby House 8 • Ruby Place • AB10 1ZP Aberdeen
VAT Number GB381060225 • EORI Number GB381060225000 • Commercial register (NL) 170 66 364
Rabobank De Kempen, Markt 7, 5531 BA Bladel (NL) • BIC RABONL2U • Branch code RABONL2UXXX • IBAN NL 20 RABO 0107530112 GBP

correspondence address

HeBlad - UK
The Balance, 7th floor, Pinfold Street
S1 2GU Sheffield, South Yorkshire
T. 0114 352 0110
info@HeBlad.co.uk
www.HeBlad.co.uk

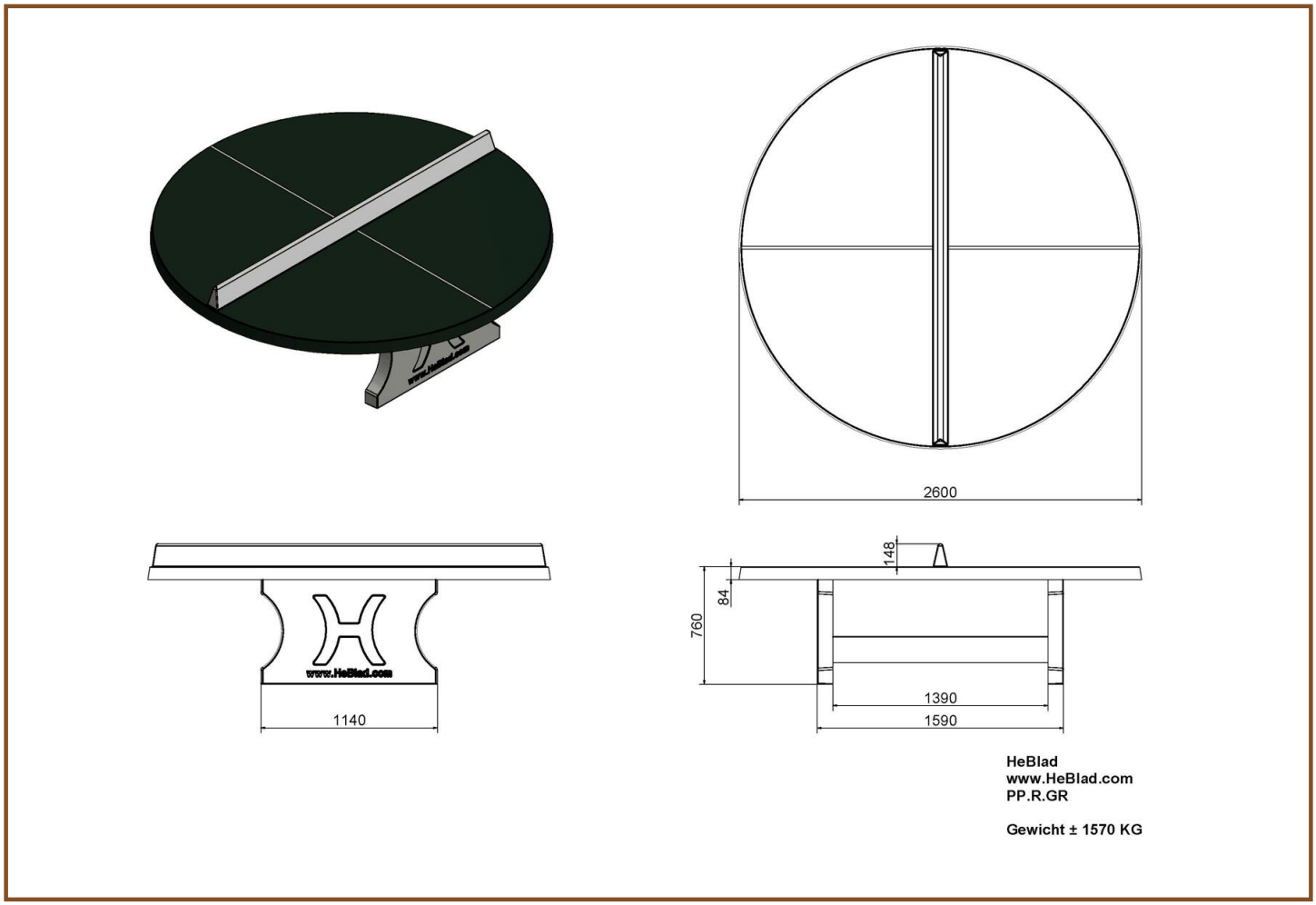

Specifications Concrete Ping-pong table green, round

Product code	PP.R.GR	Height tabletop	76 cm
Colour	Groen - RAL 6009	Height of the net	14,75 cm
Dimension playing surface (L x W)	ø 260 cm	Weight	1570 kg
Dimensions bottom base plate	ø 264 cm	Distance legs	149 cm (center to center)
Tabletop thickness	8,4 cm		

Related products

PP.AR.BL

PP.NT

B.DS.SP

OP.PP

B.S1

Our products are delivered from our factory in the Netherlands.

correspondence address

HeBlad - UK
The Balance, 7th floor, Pinfold Street
S1 2GU Sheffield, South Yorkshire
T. 0114 352 0110
info@HeBlad.co.uk
www.HeBlad.co.uk

head office address

Concrete Ping-pong table blue

Product code: PP.BL

£ 2,650.00 excl. VAT
(£ 3,180.00 incl. VAT)

This concrete ping-pong table is moulded in one piece and reinforced with double layers of steel (above and below). Due to this, the ping-pong table is almost vandal-resistant and therefore ideal for schoolyards or public spaces.

The playing surface of this ping-pong table has a blue two-component lacquer and a white lacquer lining.

We have produced this model of pin-pong table we produce since 1994 and has become one of our great successes!

Our products are delivered from our factory in the Netherlands.

12 October 2024 - Prices subject to change

correspondence address

HeBlad - UK
The Balance, 7th floor, Pinfold Street
S1 2GU Sheffield, South Yorkshire
T. 0114 352 0110
info@HeBlad.co.uk
www.HeBlad.co.uk

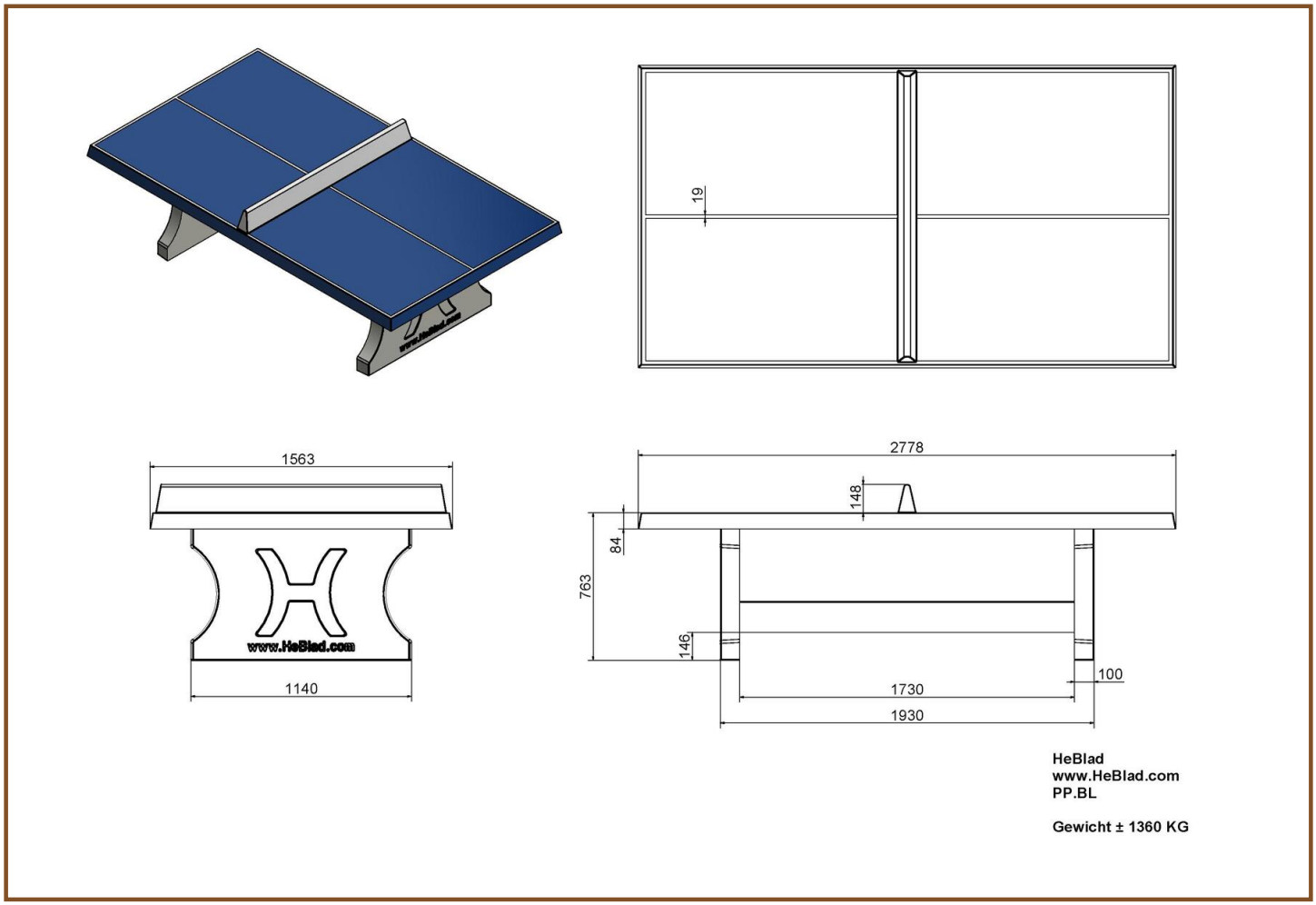

Specifications Concrete Ping-pong table blue

Product code	PP.BL	Height tabletop	76 cm
Colour	Blauw - RAL 5005	Height of the net	14,75 cm
Dimension playing surface (L x W)	274 x 152 cm	Weight	1360 kg
Dimensions bottom base plate	278 x 156 cm	Distance legs	183 cm (center to center
Tabletop thickness	8,4 cm		

Related products

PP.AR.GR

PP.R.NT

OP.PP

B.DS10

Our products are delivered from our factory in the Netherlands.

correspondence address

HeBlad - UK
The Balance, 7th floor, Pinfold Street
S1 2GU Sheffield, South Yorkshire
T. 0114 352 0110
info@HeBlad.co.uk
www.HeBlad.co.uk

head office address

Blue table tennis table, rounded

Product code: PP.AR.BL

£ 2,750.00 excl. VAT
(£ 3,300.00 incl. VAT)

Safety is a priority for HeBlad! This ping-pong table has rounded corners in order to improve the safety of playing grounds. The bright blue colour of the table and the shape will invite young and old to play a game of ping-pong.

As well as all the other tables this product is completely moulded in one piece. The steel reinforcement above and below and the two-component lacquer guarantee high quality. This table is weatherproof and vandal-resistant.

Our products are delivered from our factory in the Netherlands.

Registred under: HeBlad BV • HM Revenue and Customs • Ruby House 8 • Ruby Place • AB10 1ZP Aberdeen
VAT Number GB381060225 • EORI Number GB381060225000 • Commercial register (NL) 170 66 364
Rabobank De Kempen, Markt 7, 5531 BA Bladel (NL) • BIC RABONL2U • Branch code RABONL2UXXX • IBAN NL 20 RABO 0107530112 GBP

correspondence address

HeBlad - UK
The Balance, 7th floor, Pinfold Street
S1 2GU Sheffield, South Yorkshire
T. 0114 352 0110
info@HeBlad.co.uk
www.HeBlad.co.uk

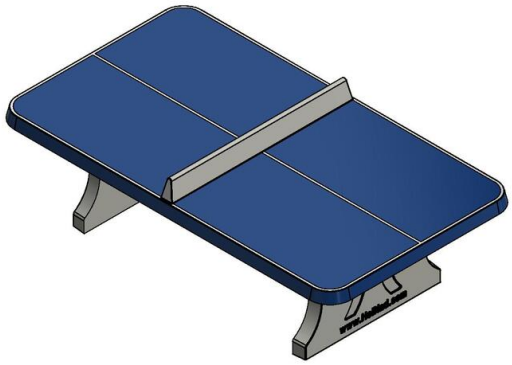

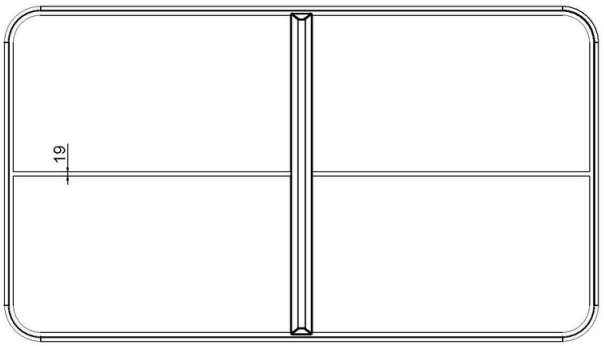

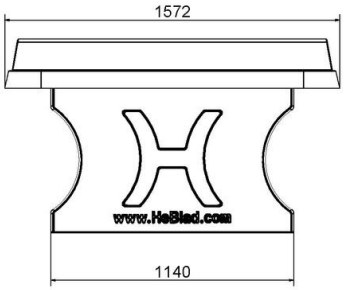

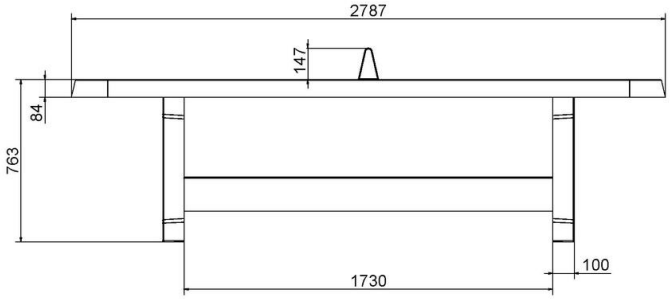

HeBlad
www.HeBlad.com
PP.AR.BL

Gewicht ± 1360 KG

Specifications Blue table tennis table, rounded

Product code	PP.AR.BL	Height tabletop	76 cm
Colour	Blauw - RAL 5005	Height of the net	14,75 cm
Dimension playing surface (L x W)	274 x 152 cm	Weight	1360 kg
Dimensions bottom base plate	279 x 157 cm	Distance legs	183 cm (center to center
Tabletop thickness	8,4 cm		

Related products

PP.NT

PP.R.GR

B.S1

OP.PP

B.DS.SP

Our products are delivered from our factory in the Netherlands.

correspondence address

HeBlad - UK
The Balance, 7th floor, Pinfold Street
S1 2GU Sheffield, South Yorkshire
T. 0114 352 0110
info@HeBlad.co.uk
www.HeBlad.co.uk

head office address

Concrete Ping-pong table blue, round

Product code: PP.R.BL

£ 3,300.00 excl. VAT
(£ 3,960.00 incl. VAT)

This extra big round ping-pong table opens a whole world of new games, where many players
can participate. There will always be some action around the table.
The round table surface has a diameter of 260 cm and has a single white “net’ (no cross) and a white middle line. The table is moulded in one piece and reinforced above as well below. The playing surface has a blue two-component lacquer.

Our products are delivered from our factory in the Netherlands.

Registred under: HeBlad BV • HM Revenue and Customs • Ruby House 8 • Ruby Place • AB10 1ZP Aberdeen
VAT Number GB381060225 • EORI Number GB381060225000 • Commercial register (NL) 170 66 364
Rabobank De Kempen, Markt 7, 5531 BA Bladel (NL) • BIC RABONL2U • Branch code RABONL2UXXX • IBAN NL 20 RABO 0107530112 GBP

correspondence address

HeBlad - UK
The Balance, 7th floor, Pinfold Street
S1 2GU Sheffield, South Yorkshire
T. 0114 352 0110
info@HeBlad.co.uk
www.HeBlad.co.uk

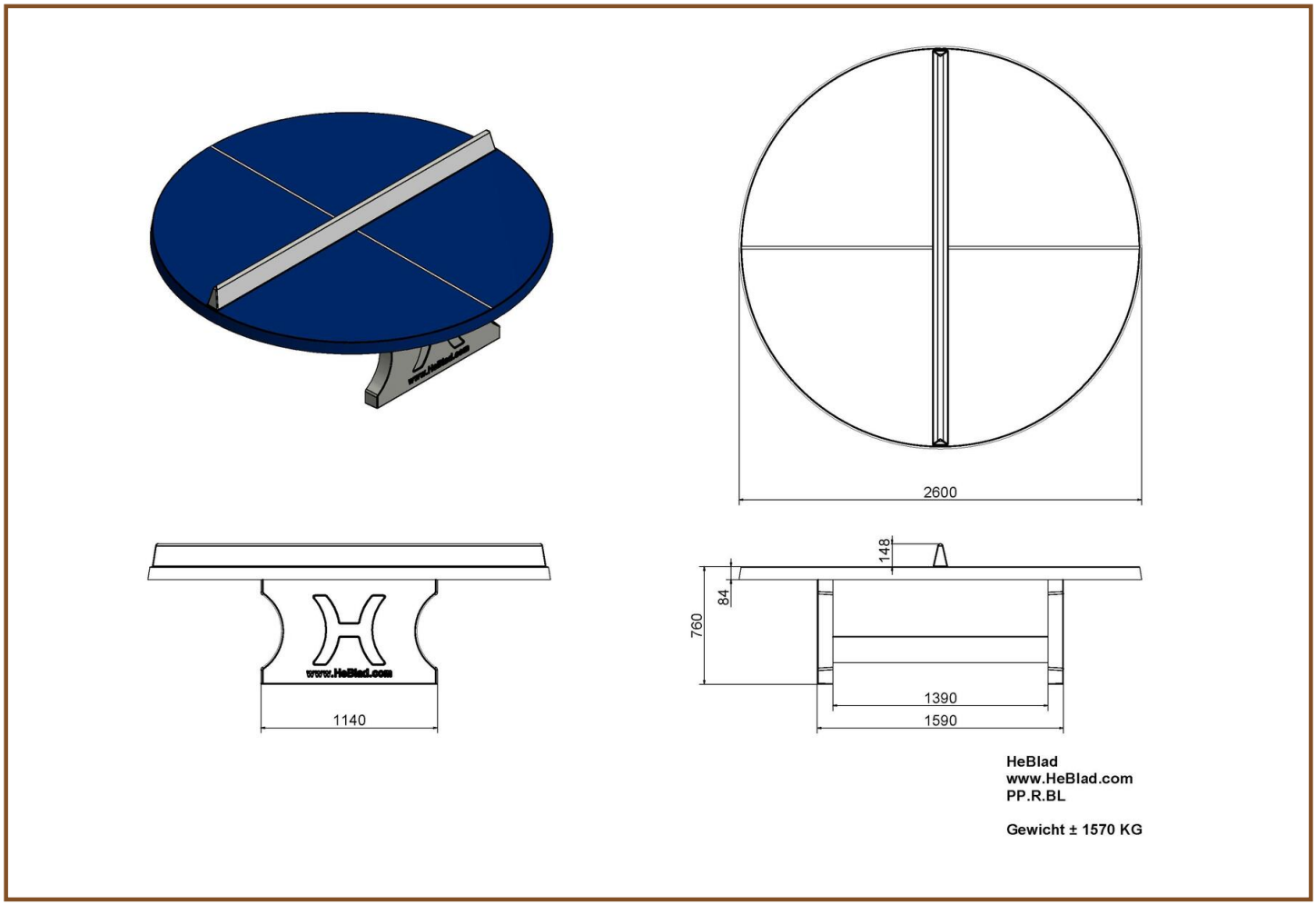

Specifications Concrete Ping-pong table blue, round

Product code	PP.R.BL	Height tabletop	76 cm
Colour	Blauw - RAL 5005	Height of the net	14,75 cm
Dimension playing surface (L x W)	ø 260 cm	Weight	1570 kg
Dimensions bottom base plate	ø 264 cm	Distance legs	149 cm (center to center)
Tabletop thickness	8,4 cm		

Related products

PP.AR.GR

PP.NT

B.DS10

OP.PP

Our products are delivered from our factory in the Netherlands.

correspondence address

HeBlad - UK
The Balance, 7th floor, Pinfold Street
S1 2GU Sheffield, South Yorkshire
T. 0114 352 0110
info@HeBlad.co.uk
www.HeBlad.co.uk

head office address

Concrete Ping-pong table anthracite

Product code: PP.A

£ 2,650.00 excl. VAT
(£ 3,180.00 incl. VAT)

This rectangular ping-pong table with a antracite playing surface is a recreational tournament table for outdoor sport. Because this table is reinforced with double layers of steel (above and below) it resists all wind and weather conditions: good for many years and a lot of joy of playing.

The ping-pong table is moulded in one piece, that means also the “net” in the middle is solid concrete. The playing surface is sprayed in green with a two-component lacquer. The white lining and the “net” are not stickered but solid paint and lacquer.

Our products are delivered from our factory in the Netherlands.

12 October 2024 - Prices subject to change

correspondence address

HeBlad - UK
The Balance, 7th floor, Pinfold Street
S1 2GU Sheffield, South Yorkshire
T. 0114 352 0110
info@HeBlad.co.uk
www.HeBlad.co.uk

head office address

HeBlad BV
Diamantweg 22
NL - 5527 LC Hapert

Specifications Concrete Ping-pong table anthracite

Product code	PP.A	Height tabletop	76 cm
Colour	Antraciet - RAL 7016	Height of the net	14,75 cm
Dimension playing surface (L x W)	274 x 152 cm	Weight	1360 kg
Dimensions bottom base plate	278 x 156 cm	Distance legs	183 cm (center to center
Tabletop thickness	8,4 cm		

Related products

PP.GR

PP.AB

HB.FB.A

B.DS.SP

B.DS10

Our products are delivered from our factory in the Netherlands.

correspondence address

HeBlad - UK
The Balance, 7th floor, Pinfold Street
S1 2GU Sheffield, South Yorkshire
T. 0114 352 0110
info@HeBlad.co.uk
www.HeBlad.co.uk

head office address

Concrete Ping-pong table anthracite, rounded

Product code: PP.AR.A

£ 2,750.00 excl. VAT
(£ 3,300.00 incl. VAT)

Because this ping-pong table has rounded corners the chance of injury is much less. Young children play a “round the table” without getting hurt at the corners. The anthracite two-component lacquer and the white lining and white “net” gives the table a chic appearance. This playing equipment is provided with strong double steel layers above and below. This makes the table as strong as iron. In addition to that our tables cannot been dismantled. The table surface, the net and the table legs are one complete unit. Not a single screw is used.

Our products are delivered from our factory in the Netherlands.

12 October 2024 - Prices subject to change

correspondence address

HeBlad - UK
The Balance, 7th floor, Pinfold Street
S1 2GU Sheffield, South Yorkshire
T. 0114 352 0110
info@HeBlad.co.uk
www.HeBlad.co.uk

head office address

HeBlad BV
Diamantweg 22
NL - 5527 LC Hapert

Specifications Concrete Ping-pong table anthracite, rounded

Product code	PP.AR.A	Height tabletop	76 cm
Colour	Antraciet - RAL 7016	Height of the net	14,75 cm
Dimension playing surface (L x W)	274 x 152 cm	Weight	1360 kg
Dimensions bottom base plate	279 x 157 cm	Distance legs	183 cm (center to center
Tabletop thickness	8,4 cm		

Related products

PP.AR.BL

HB.FB.A

BB.DL.A

B.S1

B.DS.SP

Our products are delivered from our factory in the Netherlands.

correspondence address

HeBlad - UK
The Balance, 7th floor, Pinfold Street
S1 2GU Sheffield, South Yorkshire
T. 0114 352 0110
info@HeBlad.co.uk
www.HeBlad.co.uk

head office address

Round Ping-Pong table Anthracite

Product code: PP.R.A

£ 3,300.00 excl. VAT
(£ 3,960.00 incl. VAT)

Soon more information about this product

Our products are delivered from our factory in the Netherlands.

13 October 2024 - Prices subject to change

correspondence address

HeBlad - UK
The Balance, 7th floor, Pinfold Street
S1 2GU Sheffield, South Yorkshire
T. 0114 352 0110
info@HeBlad.co.uk
www.HeBlad.co.uk

head office address

HeBlad BV
Diamantweg 22
NL - 5527 LC Hapert

Specifications Round Ping-Pong table Anthracite

Product code	PP.R.A	Height tabletop	76 cm
Colour	Antraciet - RAL 7016	Height of the net	14,75 cm
Dimension playing surface (L x W)	ø 260 cm	Weight	1570 kg
Dimensions bottom base plate	ø 264 cm	Distance legs	149 cm (center to center)
Tabletop thickness	8,4 cm		

Related products

PP.R.BL

PP.R.GR

B.DS10

PS.ST.GT.132

B.DS.SP

Our products are delivered from our factory in the Netherlands.

correspondence address

HeBlad - UK
The Balance, 7th floor, Pinfold Street
S1 2GU Sheffield, South Yorkshire
T. 0114 352 0110
info@HeBlad.co.uk
www.HeBlad.co.uk

head office address

Ping-pong table Anthracite-Concrete

Product code: PP.AB

£ 2,750.00 excl. VAT
(£ 3,300.00 incl. VAT)

For those who want a Ping-pong table in a decent color, we also have a version in Anthracite-Concrete.
The table is made of anthracite colored concrete, through and through.
Just as solid as all other HeBlad tables and also moulded in one piece of solid concrete.
A beautiful asset at school yards, at campsites or the relax area of your sports club.
When you acquire this Ping-pong table, we guarantee you years of playing fun.

Our products are delivered from our factory in the Netherlands.

Registred under: HeBlad BV • HM Revenue and Customs • Ruby House 8 • Ruby Place • AB10 1ZP Aberdeen
VAT Number GB381060225 • EORI Number GB381060225000 • Commercial register (NL) 170 66 364
Rabobank De Kempen, Markt 7, 5531 BA Bladel (NL) • BIC RABONL2U • Branch code RABONL2UXXX • IBAN NL 20 RABO 0107530112 GBP

correspondence address

HeBlad - UK
The Balance, 7th floor, Pinfold Street
S1 2GU Sheffield, South Yorkshire
T. 0114 352 0110
info@HeBlad.co.uk
www.HeBlad.co.uk

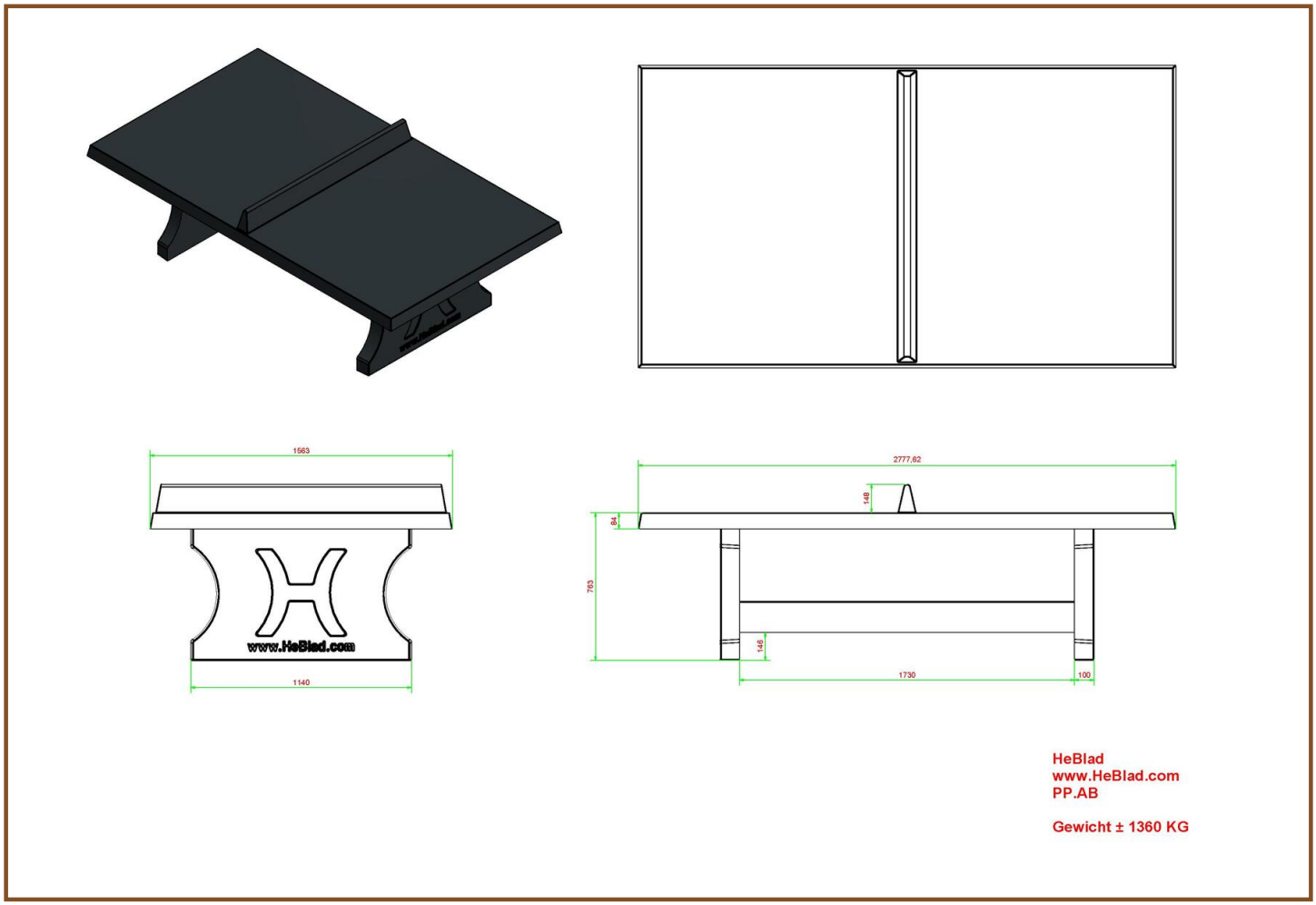

Specifications Ping-pong table Anthracite-Concrete

Product code	PP.AB	Height tabletop	76 cm
Colour	Anthracite concrete	Height of the net	14,75 cm
Dimension playing surface (L x W)	274 x 152 cm	Weight	1360 kg
Dimensions bottom base plate	278 x 156 cm	Distance legs	183 cm (center to center
Tabletop thickness	8,4 cm		

Related products

PP.AR.AB

PP.GR

PP.R.BL

OP.PS.AB

B.DS.SP

Our products are delivered from our factory in the Netherlands.

correspondence address

HeBlad - UK
The Balance, 7th floor, Pinfold Street
S1 2GU Sheffield, South Yorkshire
T. 0114 352 0110
info@HeBlad.co.uk
www.HeBlad.co.uk

head office address

Ping-pong table rounded, Anthracite-Concrete

Product code: PP.AR.AB

£ 2,850.00 excl. VAT
(£ 3,420.00 incl. VAT)

A Ping-pong table with rounded corners in an exquisite anthracite color. Less noticeable than the blue or green version, this color gives a stylish appearance. This table is made of concrete, colored through and through in anthracite, small damages are hardly visible because the inside has the same color as the outside.
Like all our other tables, the Ping-pong table is moulded in one piece of concrete and resistant to all weather influences.

Our products are delivered from our factory in the Netherlands.

Registred under: HeBlad BV • HM Revenue and Customs • Ruby House 8 • Ruby Place • AB10 1ZP Aberdeen
VAT Number GB381060225 • EORI Number GB381060225000 • Commercial register (NL) 170 66 364
Rabobank De Kempen, Markt 7, 5531 BA Bladel (NL) • BIC RABONL2U • Branch code RABONL2UXXX • IBAN NL 20 RABO 0107530112 GBP

correspondence address

HeBlad - UK
The Balance, 7th floor, Pinfold Street
S1 2GU Sheffield, South Yorkshire
T. 0114 352 0110
info@HeBlad.co.uk
www.HeBlad.co.uk

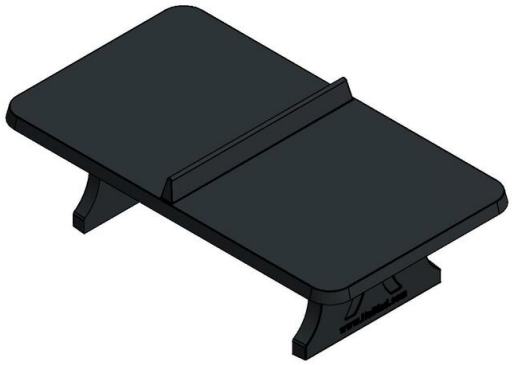

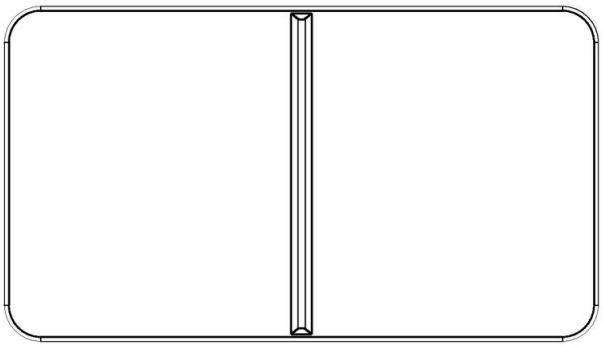

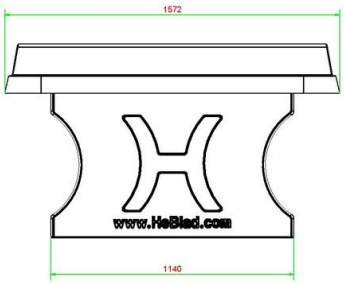

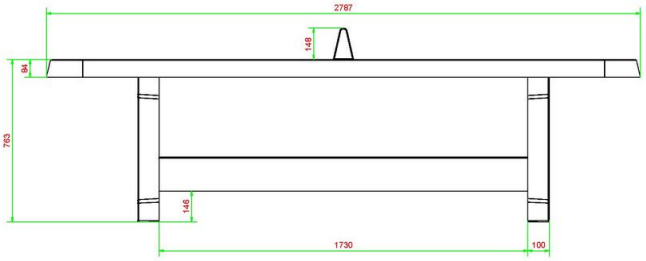

HeBlad
www.HeBlad.com
PP.AR.AB

Gewicht ± 1360 KG

Specifications Ping-pong table rounded, Anthracite-Concrete

Product code	PP.AR.AB	Height tabletop	76 cm
Colour	Anthracite concrete	Height of the net	14,75 cm
Dimension playing surface (L x W)	274 x 152 cm	Weight	1360 kg
Dimensions bottom base plate	279 x 157 cm	Distance legs	183 cm (center to center
Tabletop thickness	8,4 cm		

Related products

PP.R.AB

PP.AR.BL

OP.PP.AB

B.DS.SP

VV.NT

Our products are delivered from our factory in the Netherlands.

correspondence address

HeBlad - UK
The Balance, 7th floor, Pinfold Street
S1 2GU Sheffield, South Yorkshire
T. 0114 352 0110
info@HeBlad.co.uk
www.HeBlad.co.uk

head office address

Round Ping-Pong table Anthracite-Concrete

Product code: PP.R.AB

£ 3,500.00 excl. VAT
(£ 4,200.00 incl. VAT)

The round Ping-pong table has a diameter of 260 cm (102,36 inch) and made of Anthracite-Concrete.
Ideal for playing with a large group simultaneously with a lot of fun.
This round Ping-pong table is made of solid anthracite colored concrete. The flaming effect of the anthracite color gives this round table a very chic look.
This table is also made of a single piece of concrete like all other HeBlad tables.
A show-piece, at the school yard, at the campsite or at the sports club. In short, a solid, strong table you will enjoy for many years.

Our products are delivered from our factory in the Netherlands.

Registred under: HeBlad BV • HM Revenue and Customs • Ruby House 8 • Ruby Place • AB10 1ZP Aberdeen
VAT Number GB381060225 • EORI Number GB381060225000 • Commercial register (NL) 170 66 364
Rabobank De Kempen, Markt 7, 5531 BA Bladel (NL) • BIC RABONL2U • Branch code RABONL2UXXX • IBAN NL 20 RABO 0107530112 GBP

correspondence address

HeBlad - UK
The Balance, 7th floor, Pinfold Street
S1 2GU Sheffield, South Yorkshire
T. 0114 352 0110
info@HeBlad.co.uk
www.HeBlad.co.uk

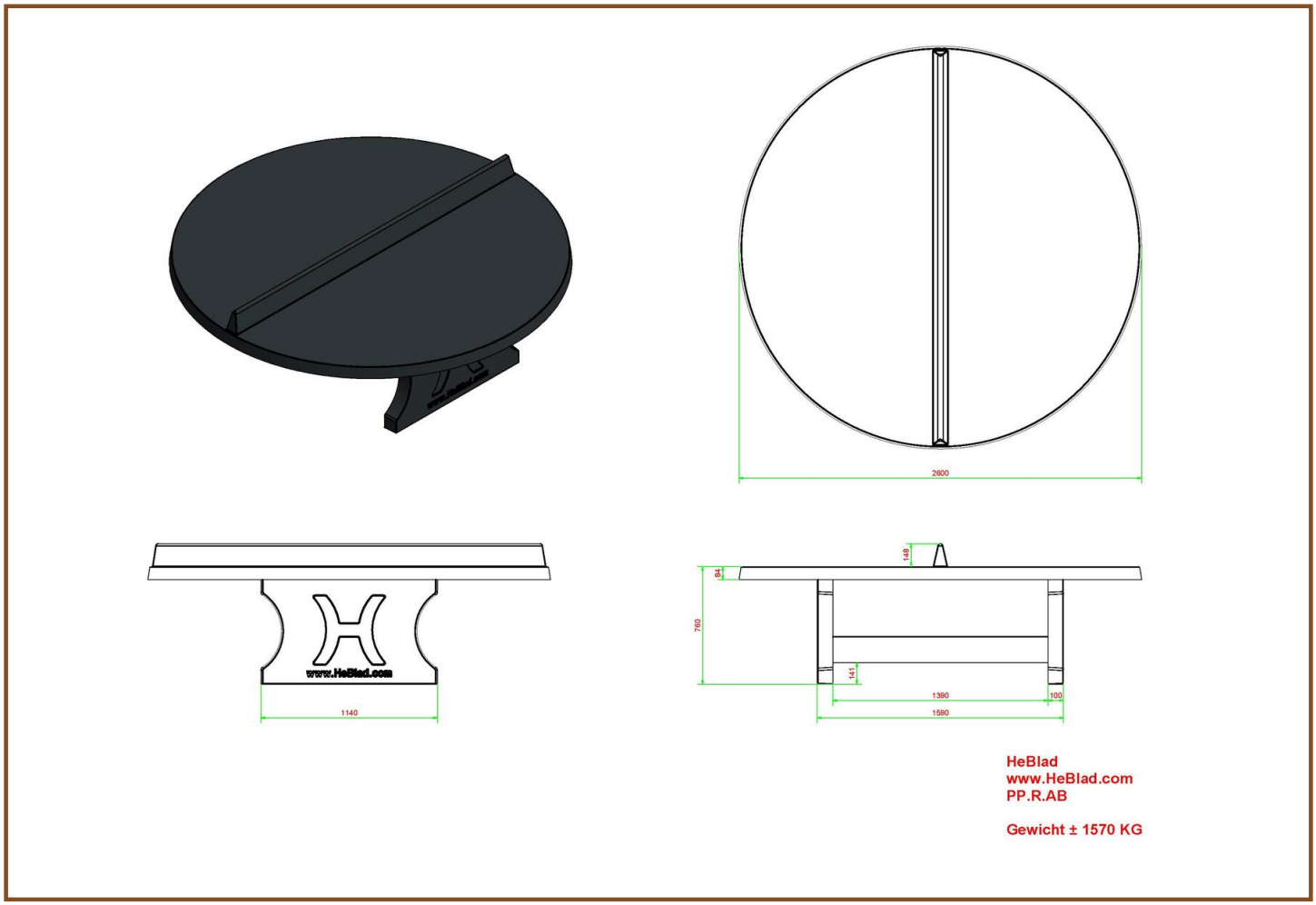

Specifications Round Ping-Pong table Anthracite-Concrete

Product code	PP.R.AB	Height tabletop	76 cm
Colour	Anthracite concrete	Height of the net	14,75 cm
Dimension playing surface (L x W)	ø 260 cm	Weight	1570 kg
Dimensions bottom base plate	ø 264 cm	Distance legs	149 cm (center to center)
Tabletop thickness	8,4 cm		

Related products

VV.AB

PP.AR.GR

PP.BL

PP.R.NT

B.DS.SP

Our products are delivered from our factory in the Netherlands.

correspondence address

HeBlad - UK
The Balance, 7th floor, Pinfold Street
S1 2GU Sheffield, South Yorkshire
T. 0114 352 0110
info@HeBlad.co.uk
www.HeBlad.co.uk

head office address

Ping-pong table in natural concrete

Product code: PP.NT

£ 2,600.00 excl. VAT
(£ 3,120.00 incl. VAT)

This table, which we call a table without frills! Natural, untreated concrete, suitable for nature areas where bright colours are not desired. This table as well is moulded in one piece from high-quality C45/55 concrete and reinforced with double layers of steel (above and below). This makes the table as strong as iron. Even without lacquer on the surface HeBlad ping-pong tables survive any season. Year after year.

Our products are delivered from our factory in the Netherlands.

Registred under: HeBlad BV • HM Revenue and Customs • Ruby House 8 • Ruby Place • AB10 1ZP Aberdeen
VAT Number GB381060225 • EORI Number GB381060225000 • Commercial register (NL) 170 66 364
Rabobank De Kempen, Markt 7, 5531 BA Bladel (NL) • BIC RABONL2U • Branch code RABONL2UXXX • IBAN NL 20 RABO 0107530112 GBP

correspondence address

HeBlad - UK
The Balance, 7th floor, Pinfold Street
S1 2GU Sheffield, South Yorkshire
T. 0114 352 0110
info@HeBlad.co.uk
www.HeBlad.co.uk

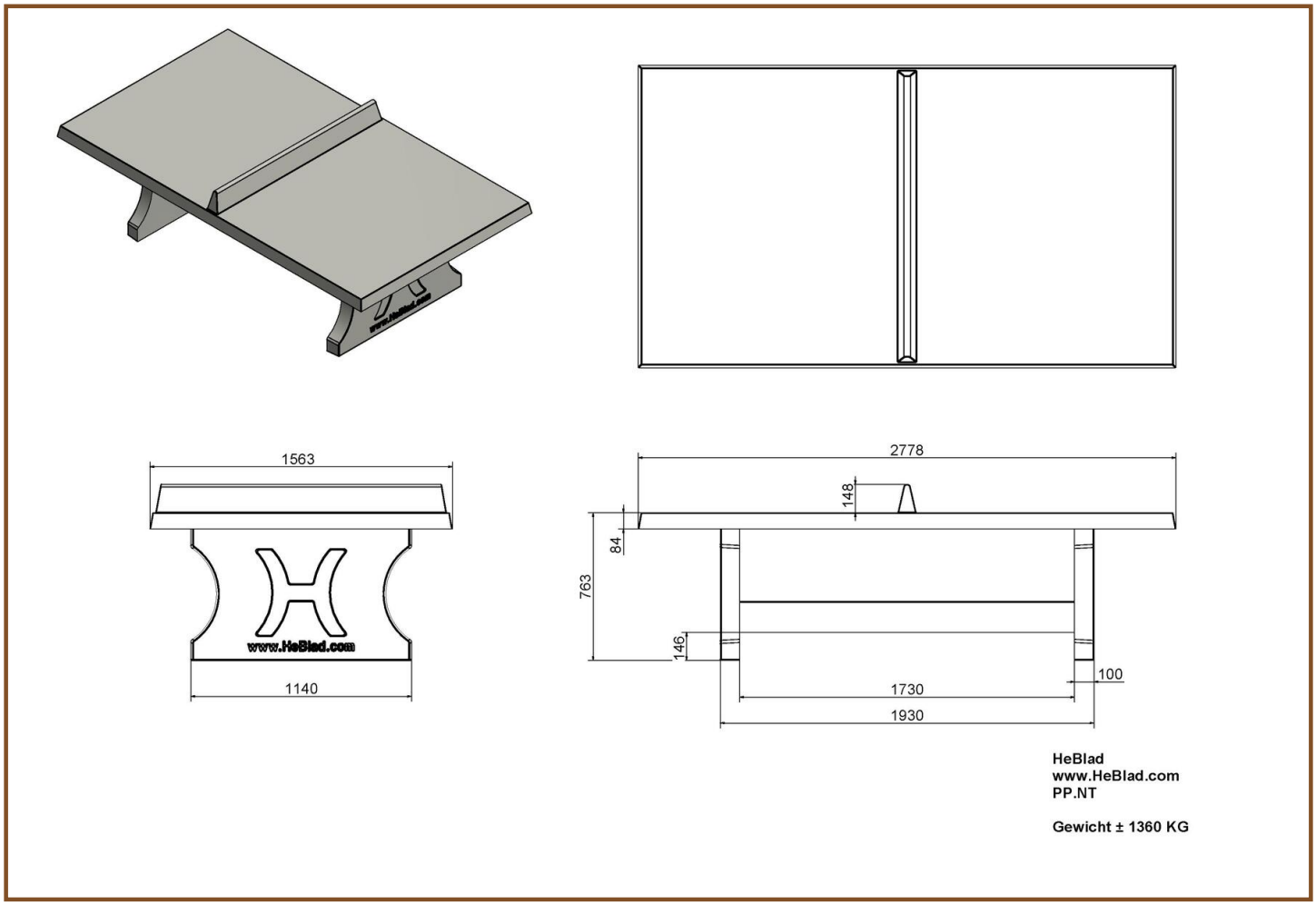

Specifications Ping-pong table in natural concrete

Product code	PP.NT	Height tabletop	76 cm
Colour	Natural concrete	Height of the net	14,75 cm
Dimension playing surface (L x W)	274 x 152 cm	Weight	1360 kg
Dimensions bottom base plate	278 x 156 cm	Distance legs	183 cm (center to center
Tabletop thickness	8,4 cm		

Related products

PP.AR.GR

PP.R.BL

B.S1

OP.PP

B.DS.SP

Our products are delivered from our factory in the Netherlands.

correspondence address

HeBlad - UK
The Balance, 7th floor, Pinfold Street
S1 2GU Sheffield, South Yorkshire
T. 0114 352 0110
info@HeBlad.co.uk
www.HeBlad.co.uk

head office address

Ping-pong table rounded, Natural Concrete

Product code: PP.AR.NT

£ 2,700.00 excl. VAT
(£ 3,240.00 incl. VAT)

This concrete ping-pong table with rounded corners is uncoated, thus natural concrete. Because of the rounded corners running around is much more safe and a normal game of ping-pong is possible at the same time. This table is also used for several other purposes.

As well as all the other tables this product is also provided with steel reinforcement above and below and moulded in one piece. Because our tables are sturdy a larger group of people can easily jump on them without damaging the construction.

Our products are delivered from our factory in the Netherlands.

Registred under: HeBlad BV • HM Revenue and Customs • Ruby House 8 • Ruby Place • AB10 1ZP Aberdeen
VAT Number GB381060225 • EORI Number GB381060225000 • Commercial register (NL) 170 66 364
Rabobank De Kempen, Markt 7, 5531 BA Bladel (NL) • BIC RABONL2U • Branch code RABONL2UXXX • IBAN NL 20 RABO 0107530112 GBP

correspondence address

HeBlad - UK
The Balance, 7th floor, Pinfold Street
S1 2GU Sheffield, South Yorkshire
T. 0114 352 0110
info@HeBlad.co.uk
www.HeBlad.co.uk

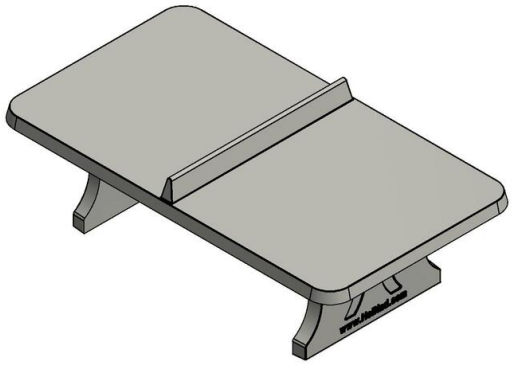

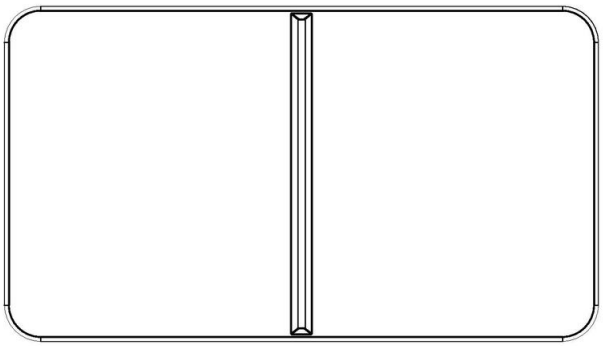

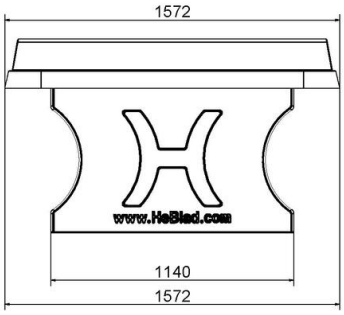

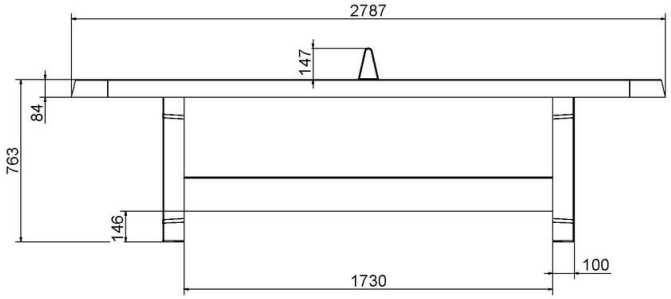

HeBlad
www.HeBlad.com
PP.AR.NT

Gewicht ± 1360 KG

Specifications Ping-pong table rounded, Natural Concrete

Product code	PP.AR.NT	Height tabletop	76 cm
Colour	Natural concrete	Height of the net	14,75 cm
Dimension playing surface (L x W)	274 x 152 cm	Weight	1360 kg
Dimensions bottom base plate	279 x 157 cm	Distance legs	183 cm (center to center
Tabletop thickness	8,4 cm		

Related products

PP.R.BL

PP.GR

B.DS10

OP.PP

Our products are delivered from our factory in the Netherlands.

correspondence address

HeBlad - UK
The Balance, 7th floor, Pinfold Street
S1 2GU Sheffield, South Yorkshire
T. 0114 352 0110
info@HeBlad.co.uk
www.HeBlad.co.uk

head office address

Round Ping-pong table in Natural Concrete

Product code: PP.R.NT

£ 3,250.00 excl. VAT
(£ 3,900.00 incl. VAT)

The ideal table for several people to join in a game at the same time. Our round table offers the possibility for a variety of games. Children are very resourceful in inventing new games. As well as that the table can be used for other purposes, e.g. as a gathering place or as a picnic table.
A raw and round surface with a diameter of 260 cm. This table is made of high quality C45/55 concrete with high pressure resistance and moulded in one piece and reinforced with double layers. This makes the table as strong as iron and vandal proof.

Our products are delivered from our factory in the Netherlands.

Registred under: HeBlad BV • HM Revenue and Customs • Ruby House 8 • Ruby Place • AB10 1ZP Aberdeen
VAT Number GB381060225 • EORI Number GB381060225000 • Commercial register (NL) 170 66 364
Rabobank De Kempen, Markt 7, 5531 BA Bladel (NL) • BIC RABONL2U • Branch code RABONL2UXXX • IBAN NL 20 RABO 0107530112 GBP

correspondence address

HeBlad - UK
The Balance, 7th floor, Pinfold Street
S1 2GU Sheffield, South Yorkshire
T. 0114 352 0110
info@HeBlad.co.uk
www.HeBlad.co.uk

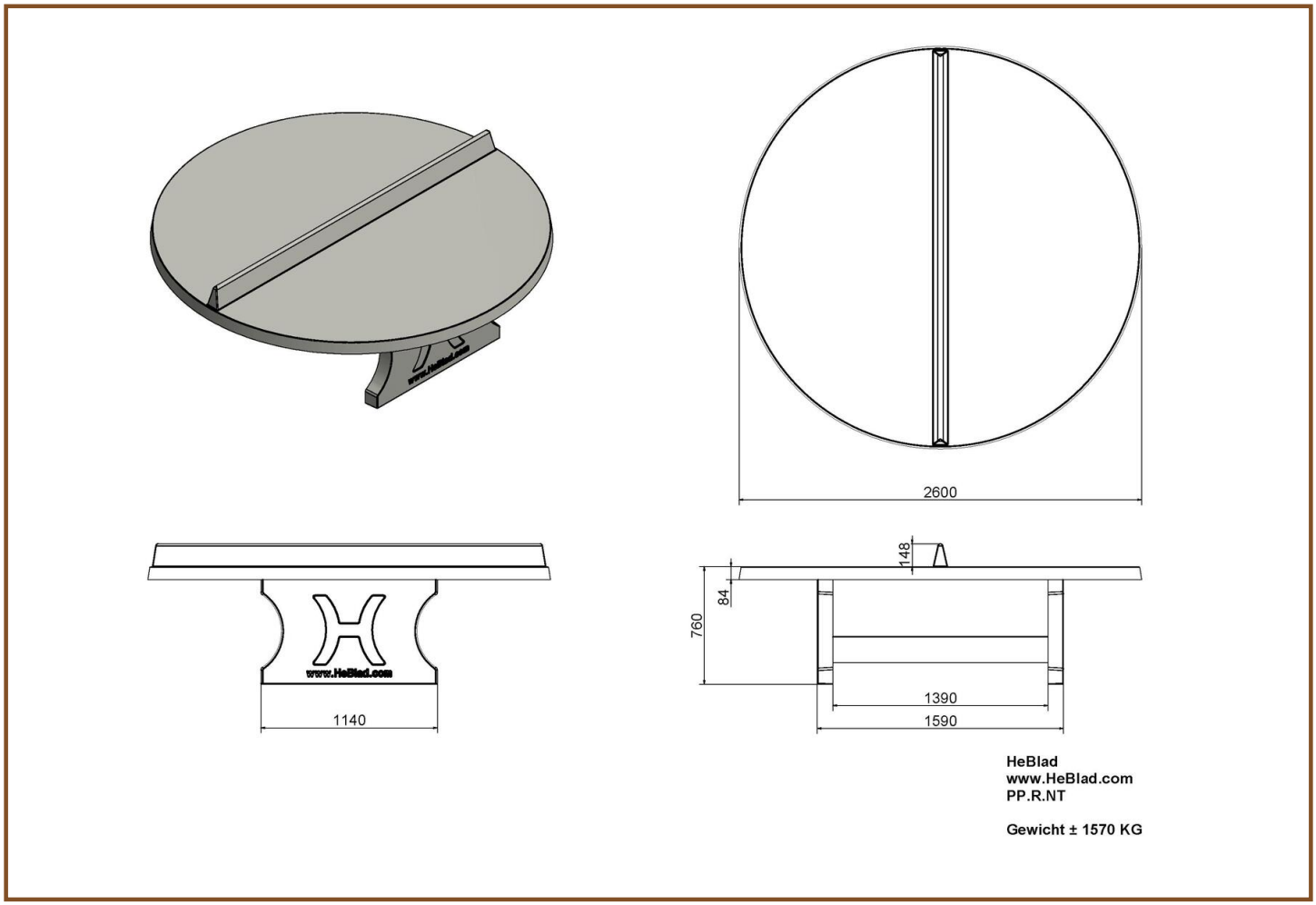

Specifications Round Ping-pong table in Natural Concrete

Product code	PP.R.NT	Height tabletop	76 cm
Colour	Natural concrete	Height of the net	14,75 cm
Dimension playing surface (L x W)	ø 260 cm	Weight	1570 kg
Dimensions bottom base plate	ø 264 cm	Distance legs	149 cm (center to center)
Tabletop thickness	8,4 cm		

Related products

PP.AR.GR

PP.BL

B.DS10

OP.PP

B.S1

Our products are delivered from our factory in the Netherlands.

correspondence address

HeBlad - UK
The Balance, 7th floor, Pinfold Street
S1 2GU Sheffield, South Yorkshire
T. 0114 352 0110
info@HeBlad.co.uk
www.HeBlad.co.uk

head office address

Ping pong table low, rounded Green

Product code: PP.AR.LOW.GR

£ 2,750.00 excl. VAT
(£ 3,300.00 incl. VAT)

Our products are delivered from our factory in the Netherlands.

12 October 2024 - Prices subject to change

correspondence address

HeBlad - UK
The Balance, 7th floor, Pinfold Street
S1 2GU Sheffield, South Yorkshire
T. 0114 352 0110
info@HeBlad.co.uk
www.HeBlad.co.uk

head office address

HeBlad BV
Diamantweg 22
NL - 5527 LC Hapert

Specifications Ping pong table low, rounded Green

Product code	PP.AR.LOW.GR	Height tabletop	50 cm
Colour	Groen - RAL 6009	Height of the net	14,75 cm
Dimension playing surface (L x W)	274 x 152 cm	Weight	1380 kg
Dimensions bottom base plate	279 x 157 cm	Distance legs	183 cm (center to center
Tabletop thickness	8,4 cm		

Related products

PP.AR.LOW.A

PP.AR.LOW.BL

B.S1.pastel

GT.LD.4

PP.AR.GR

Our products are delivered from our factory in the Netherlands.

correspondence address

HeBlad - UK
The Balance, 7th floor, Pinfold Street
S1 2GU Sheffield, South Yorkshire
T. 0114 352 0110
info@HeBlad.co.uk
www.HeBlad.co.uk

head office address

Ping pong table low, rounded Blue

Product code: PP.AR.LOW.BL

£ 2,750.00 excl. VAT
(£ 3,300.00 incl. VAT)

Our products are delivered from our factory in the Netherlands.

12 October 2024 - Prices subject to change

correspondence address

HeBlad - UK
The Balance, 7th floor, Pinfold Street
S1 2GU Sheffield, South Yorkshire
T. 0114 352 0110
info@HeBlad.co.uk
www.HeBlad.co.uk

head office address

HeBlad BV
Diamantweg 22
NL - 5527 LC Hapert

Specifications Ping pong table low, rounded Blue

Product code	PP.AR.LOW.BL	Height tabletop	50 cm
Colour	Blauw - RAL 5005	Height of the net	14,75 cm
Dimension playing surface (L x W)	274 x 152 cm	Weight	1380 kg
Dimensions bottom base plate	279 x 157 cm	Distance legs	183 cm (center to center
Tabletop thickness	8,4 cm		

Related products

PP.AR.LOW.A

B.S1.pastel

GT.LD.AB4

OP.PP

Our products are delivered from our factory in the Netherlands.

correspondence address

HeBlad - UK
The Balance, 7th floor, Pinfold Street
S1 2GU Sheffield, South Yorkshire
T. 0114 352 0110
info@HeBlad.co.uk
www.HeBlad.co.uk

head office address

Ping pong table low, rounded Anthracite

Product code: PP.AR.LOW.A

£ 2,750.00 excl. VAT
(£ 3,300.00 incl. VAT)

Our products are delivered from our factory in the Netherlands.

13 October 2024 - Prices subject to change

correspondence address

HeBlad - UK
The Balance, 7th floor, Pinfold Street
S1 2GU Sheffield, South Yorkshire
T. 0114 352 0110
info@HeBlad.co.uk
www.HeBlad.co.uk

head office address

HeBlad BV
Diamantweg 22
NL - 5527 LC Hapert

Specifications Ping pong table low, rounded Anthracite

Product code	PP.AR.LOW.A	Height tabletop	50 cm
Colour	Antraciet - RAL 7016	Height of the net	14,75 cm
Dimension playing surface (L x W)	274 x 152 cm	Weight	1380 kg
Dimensions bottom base plate	279 x 157 cm	Distance legs	183 cm (center to center
Tabletop thickness	8,4 cm		

Our products are delivered from our factory in the Netherlands.

correspondence address

HeBlad - UK
The Balance, 7th floor, Pinfold Street
S1 2GU Sheffield, South Yorkshire
T. 0114 352 0110
info@HeBlad.co.uk
www.HeBlad.co.uk

head office address

Concrete base plate for tennis table

Product code: OP.PP

£ 1,800.00 excl. VAT
(£ 2,160.00 incl. VAT)

A frequently heard complaint is that the grass under the ping pong tables is difficult to mow. This problem is solved immediately with a bottom plate. The concrete bottom plate has a size of 179 x 299 cm and is 10 cm thick. This way the space under the table remains free of grass and is easy to keep clean.

This bottom plate is suitable for rectangular and rounded table tennis tables. Also available with grass tiles around (OP.PP.TG).

Our products are delivered from our factory in the Netherlands.

Registred under: HeBlad BV • HM Revenue and Customs • Ruby House 8 • Ruby Place • AB10 1ZP Aberdeen
VAT Number GB381060225 • EORI Number GB381060225000 • Commercial register (NL) 170 66 364
Rabobank De Kempen, Markt 7, 5531 BA Bladel (NL) • BIC RABONL2U • Branch code RABONL2UXXX • IBAN NL 20 RABO 0107530112 GBP

correspondence address

HeBlad - UK
The Balance, 7th floor, Pinfold Street
S1 2GU Sheffield, South Yorkshire
T. 0114 352 0110
info@HeBlad.co.uk
www.HeBlad.co.uk

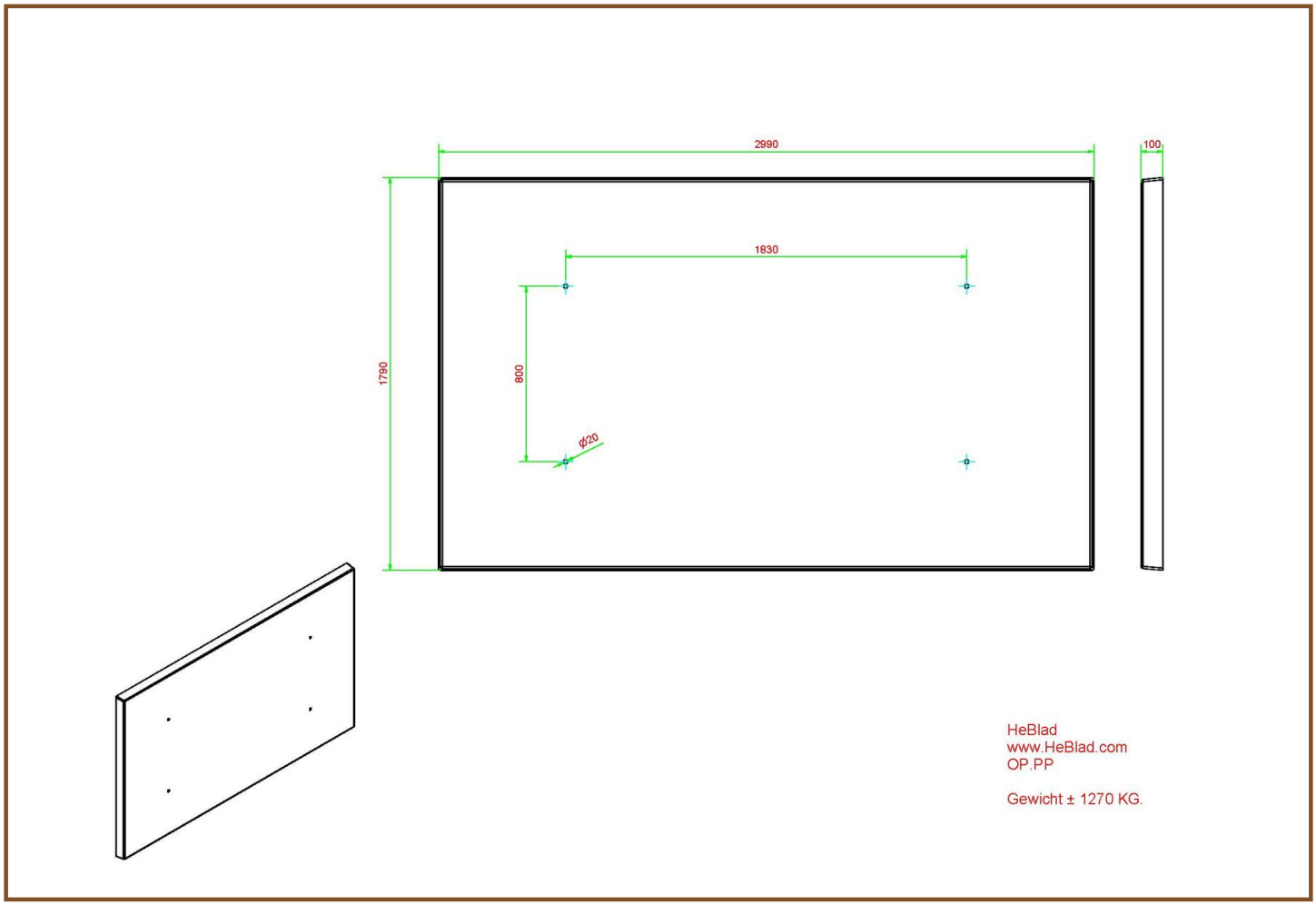

Specifications Concrete base plate for tennis table

Product code	OP.PP	Finishing base plate	Smooth concrete
Colour	Natural concrete	lifting device	139 x 87 x 99 cm
Dimensions (L x W x H)	299 x 179 x 10 cm	preparation attachment	Holes for bolts M16
Weight	1270 kg		

Related products

PP.AR.BL

PP.AR.GR

PP.BL

PP.GR

Our products are delivered from our factory in the Netherlands.

correspondence address

HeBlad - UK
The Balance, 7th floor, Pinfold Street
S1 2GU Sheffield, South Yorkshire
T. 0114 352 0110
info@HeBlad.co.uk
www.HeBlad.co.uk

head office address

Concrete base plate for tennis table Anthracite-Concrete

Product code: OP.PP.AB

£ 1,900.00 excl. VAT
(£ 2,280.00 incl. VAT)

A frequently heard complaint is that the grass under the ping pong tables is difficult to mow. This problem is solved immediately with a bottom plate. The concrete bottom plate has a size of 179 x 299 cm and is 10 cm thick. This way the space under the table remains free of grass and is easy to keep clean.

This bottom plate is suitable for rectangular and rounded table tennis tables. Also available with grass tiles around (OP.PP.TG).

Our products are delivered from our factory in the Netherlands.

Registred under: HeBlad BV • HM Revenue and Customs • Ruby House 8 • Ruby Place • AB10 1ZP Aberdeen
VAT Number GB381060225 • EORI Number GB381060225000 • Commercial register (NL) 170 66 364
Rabobank De Kempen, Markt 7, 5531 BA Bladel (NL) • BIC RABONL2U • Branch code RABONL2UXXX • IBAN NL 20 RABO 0107530112 GBP

correspondence address

HeBlad - UK
The Balance, 7th floor, Pinfold Street
S1 2GU Sheffield, South Yorkshire
T. 0114 352 0110
info@HeBlad.co.uk
www.HeBlad.co.uk

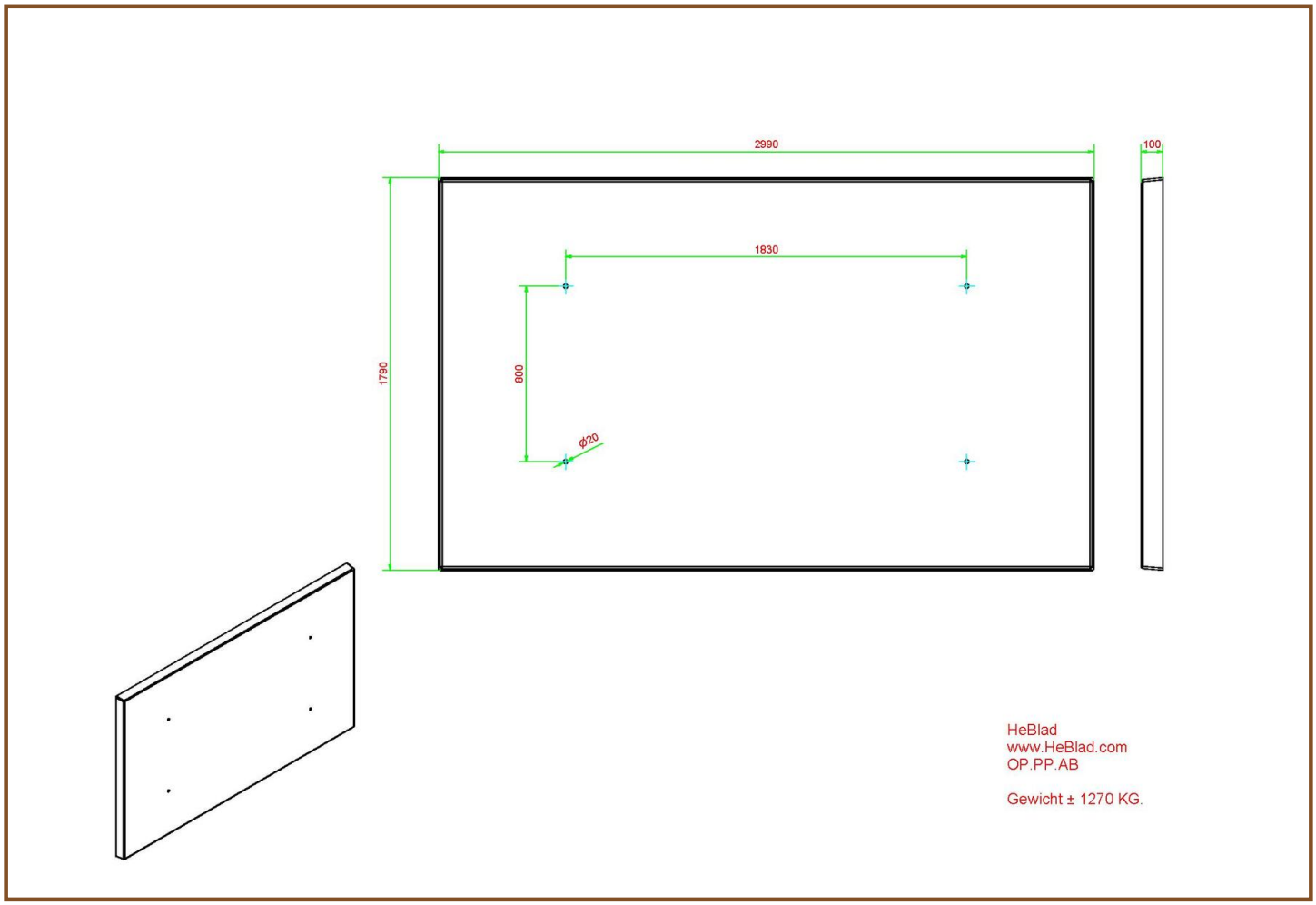

Specifications Concrete base plate for tennis table Anthracite-Concrete

Product code	OP.PP.AB	Finishing base plate	Smooth concrete
Colour	Anthracite concrete	lifting device	139 x 87 x 99 cm
Dimensions (L x W x H)	299 x 179 x 10 cm	preparation attachment	Holes for bolts M16
Weight	1270 kg		

Related products

OP.PP

OP.PS.AB

PP.AR.BL

PP.GR

Our products are delivered from our factory in the Netherlands.

correspondence address

HeBlad - UK
The Balance, 7th floor, Pinfold Street
S1 2GU Sheffield, South Yorkshire
T. 0114 352 0110
info@HeBlad.co.uk
www.HeBlad.co.uk

head office address

A set of support blocks for different tables

Product code: OV.PP.SET

£ 1,150.00 excl. VAT
(£ 1,380.00 incl. VAT)

A set of support blocks in natural concrete.

Dimensions are 122.5 x 20 x 6.5 cm.

This set consists of 2 concrete plates that are suitable for mounting on the bottom of table tennis table legs.
The set is suitable for all our ping pong tables, football volleyball tables and football tables.

Because the concrete slabs are 5 cm larger than the table legs after installation, the pressure per cm2 is more than halved, so that the table cannot sink as quickly on softer surfaces. Think of the surface of wood chips or in sand.
There is also an advantage when you place these under feet under the table legs in the grass. It is then much easier to cut the grass against the legs.

Price only valid in combination with a ping pong table.

Our products are delivered from our factory in the Netherlands.

Registred under: HeBlad BV • HM Revenue and Customs • Ruby House 8 • Ruby Place • AB10 1ZP Aberdeen
VAT Number GB381060225 • EORI Number GB381060225000 • Commercial register (NL) 170 66 364
Rabobank De Kempen, Markt 7, 5531 BA Bladel (NL) • BIC RABONL2U • Branch code RABONL2UXXX • IBAN NL 20 RABO 0107530112 GBP

correspondence address

HeBlad - UK
The Balance, 7th floor, Pinfold Street
S1 2GU Sheffield, South Yorkshire
T. 0114 352 0110
info@HeBlad.co.uk
www.HeBlad.co.uk

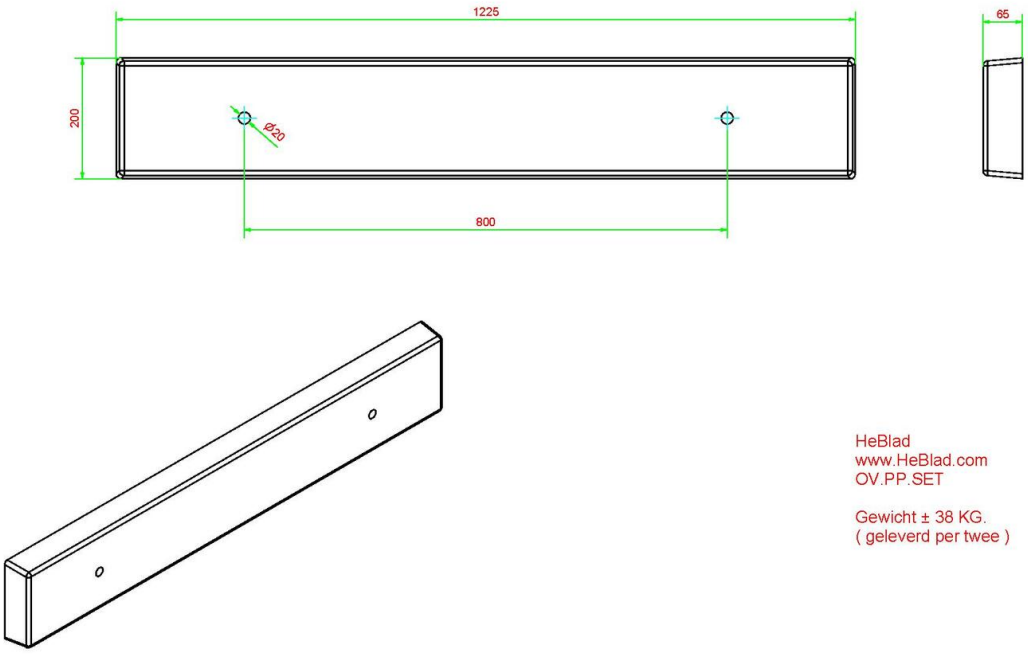

Specifications A set of support blocks for different tables

Product code	OV.PP.SET
Weight	38 kg

Our products are delivered from our factory in the Netherlands.

correspondence address

HeBlad - UK
The Balance, 7th floor, Pinfold Street
S1 2GU Sheffield, South Yorkshire
T. 0114 352 0110
info@HeBlad.co.uk
www.HeBlad.co.uk

head office address

Repair Kit table tennis green

Product code: HB.Repair.PP.GR

£ 200.00 excl. VAT
(£ 240.00 incl. VAT)

Our products are delivered from our factory in the Netherlands.

12 October 2024 - Prices subject to change

correspondence address

HeBlad - UK
The Balance, 7th floor, Pinfold Street
S1 2GU Sheffield, South Yorkshire
T. 0114 352 0110
info@HeBlad.co.uk
www.HeBlad.co.uk

head office address

HeBlad BV
Diamantweg 22
NL - 5527 LC Hapert

Specifications Repair Kit table tennis green

Product code	HB.Repair.PP.GR

Our products are delivered from our factory in the Netherlands.

correspondence address

HeBlad - UK
The Balance, 7th floor, Pinfold Street
S1 2GU Sheffield, South Yorkshire
T. 0114 352 0110
info@HeBlad.co.uk
www.HeBlad.co.uk

head office address

Repair kit ping pong table Blue

Product code: HB.Repair.PP.BL

£ 200.00 excl. VAT
(£ 240.00 incl. VAT)

Our products are delivered from our factory in the Netherlands.

Registred under: HeBlad BV • HM Revenue and Customs • Ruby House 8 • Ruby Place • AB10 1ZP Aberdeen
VAT Number GB381060225 • EORI Number GB381060225000 • Commercial register (NL) 170 66 364
Rabobank De Kempen, Markt 7, 5531 BA Bladel (NL) • BIC RABONL2U • Branch code RABONL2UXXX • IBAN NL 20 RABO 0107530112 GBP

correspondence address

HeBlad - UK
The Balance, 7th floor, Pinfold Street
S1 2GU Sheffield, South Yorkshire
T. 0114 352 0110
info@HeBlad.co.uk
www.HeBlad.co.uk

head office address

HeBlad BV
Diamantweg 22
NL - 5527 LC Hapert

Specifications Repair kit ping pong table Blue

Product code	HB.Repair.PP.BL

Our products are delivered from our factory in the Netherlands.

correspondence address

HeBlad - UK
The Balance, 7th floor, Pinfold Street
S1 2GU Sheffield, South Yorkshire
T. 0114 352 0110
info@HeBlad.co.uk
www.HeBlad.co.uk

head office address

Concrete Foot Volleyball Table Green

Product code: VV.GR

£ 3,750.00 excl. VAT
(£ 4,500.00 incl. VAT)

A very solid sport- and play object with slightly curved tabletop in the dimensions of a ping pong table
(107,9 x 59,8 inch / 274 x 152 cm) made of solid concrete, moulded in one piece.
A table where all kinds of games with a football can be played on.
This table guarantees a lot of fun.
Like all HeBlad products, our Foot Volleyball Table is resistant to all weather influences. Really a show-piece for school yards, parks, in playgrounds at sports clubs etc...
The Foot Volleyball Table is made of concrete in the color Green.
Also available in Natural Conrete, Anthracite-Concrete and Blue.

We recommend placing the foot volleyball table in an obstacle-free area of

10 x 8 meters.
Agile football players can play with less free space.

Our products are delivered from our factory in the Netherlands.

12 October 2024 - Prices subject to change

correspondence address

HeBlad - UK
The Balance, 7th floor, Pinfold Street
S1 2GU Sheffield, South Yorkshire
T. 0114 352 0110
info@HeBlad.co.uk
www.HeBlad.co.uk

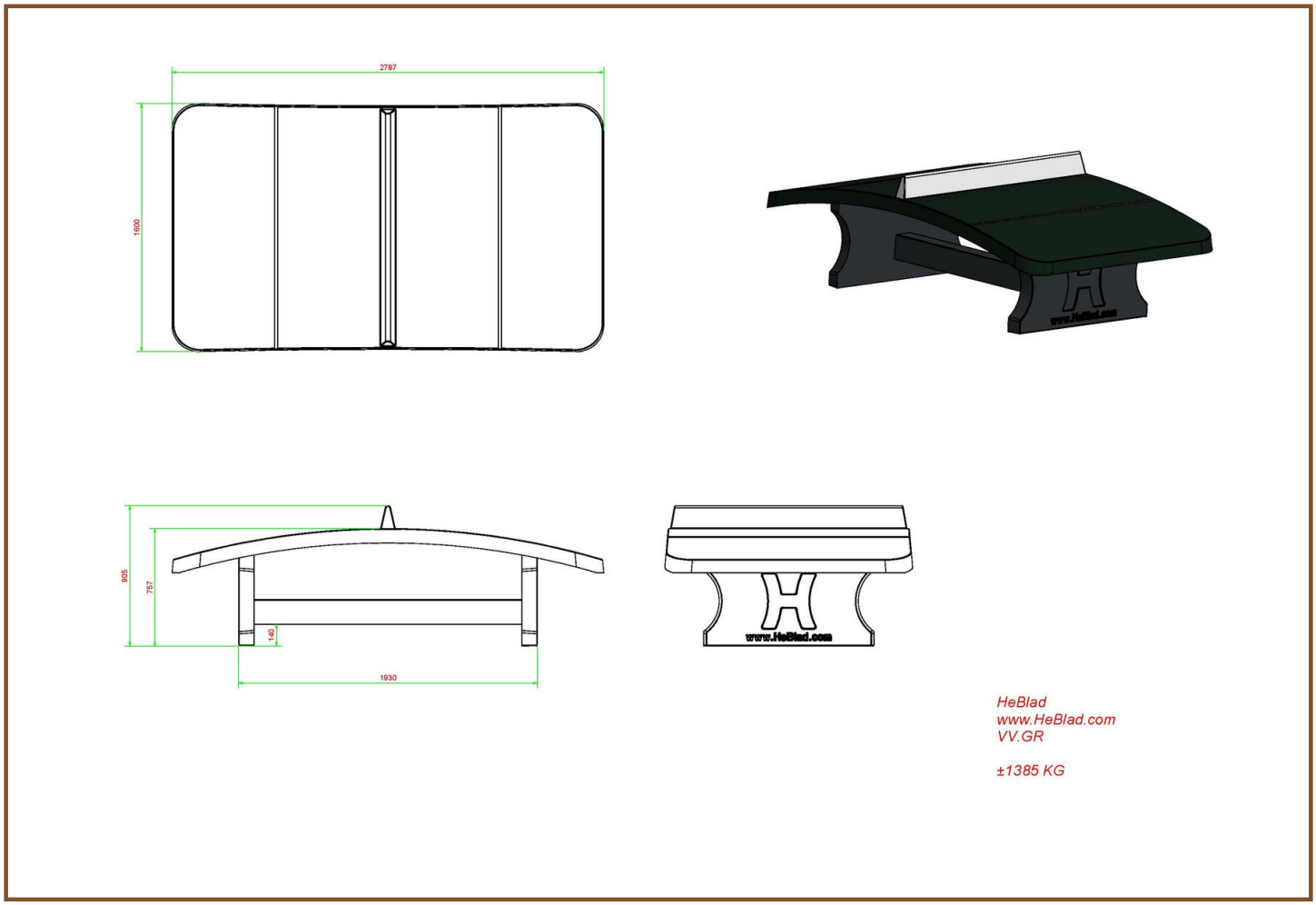

Specifications Concrete Foot Volleyball Table Green

Product code	VV.GR	Height tabletop	76 cm
Colour	Groen - RAL 6009	Height of the net	14,75 cm
Dimension playing surface (L x W)	274 x 152 cm	Weight	1385 kg
Dimensions bottom base plate	278 x 156 cm	Distance legs	183 cm (center to center
Tabletop thickness	8,4 cm		

Related products

VV.AB

VV.NT

PP.AR.AB

PP.BL

PP.R.GR

Our products are delivered from our factory in the Netherlands.

correspondence address

HeBlad - UK
The Balance, 7th floor, Pinfold Street
S1 2GU Sheffield, South Yorkshire
T. 0114 352 0110
info@HeBlad.co.uk
www.HeBlad.co.uk

head office address

Concrete Foot Volleyball Table Blue

Product code: VV.BL

£ 3,750.00 excl. VAT
(£ 4,500.00 incl. VAT)

A very solid sport- and play object with slightly curved tabletop in the dimensions of a ping pong table
(107,9 x 59,8 inch / 274 x 152 cm) made of solid concrete, moulded in one piece.
A table where all kinds of games with a football can be played on.
This table guarantees a lot of fun.
Like all HeBlad products, our Foot Volleyball Table is resistant to all weather influences. Really a show-piece for school yards, parks, in playgrounds at sports clubs etc...
The Foot Volleyball Table is made of concrete in the color Blue.
Also available in Antracite-Contrete, Naturel Concrete and Green.

We recommend placing the foot volleyball table in an obstacle-free area of

10 x 8 meters.
Agile football players can play with less free space.

Our products are delivered from our factory in the Netherlands.

12 October 2024 - Prices subject to change

correspondence address

HeBlad - UK
The Balance, 7th floor, Pinfold Street
S1 2GU Sheffield, South Yorkshire
T. 0114 352 0110
info@HeBlad.co.uk
www.HeBlad.co.uk

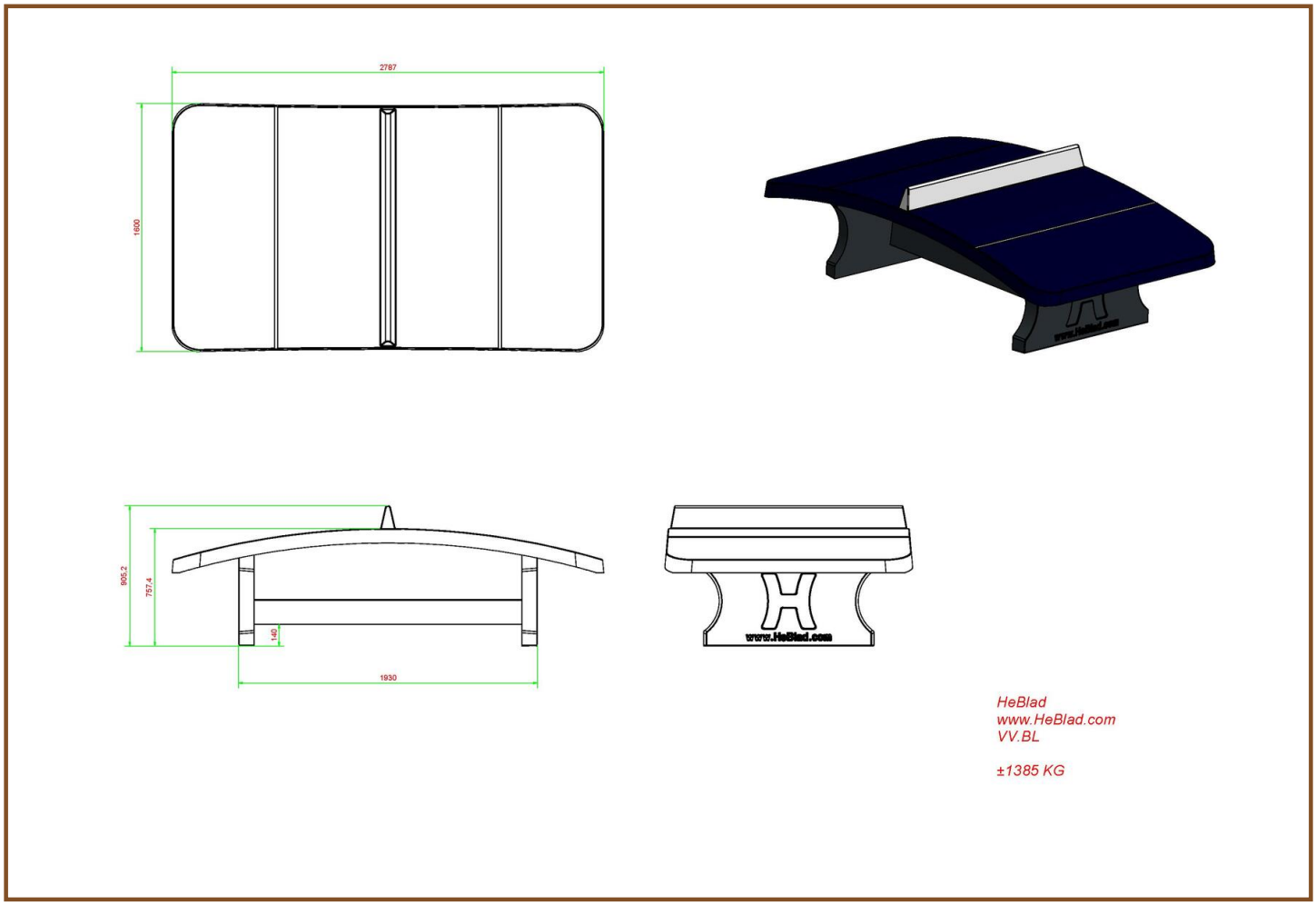

Specifications Concrete Foot Volleyball Table Blue

Product code	VV.BL	Height tabletop	76 cm
Colour	Blauw - RAL 5005	Height of the net	14,75 cm
Dimension playing surface (L x W)	274 x 152 cm	Weight	1385 kg
Dimensions bottom base plate	278 x 156 cm	Distance legs	183 cm (center to center
Tabletop thickness	8,4 cm		

Related products

VV.AB

VV.GR

PP.AR.GR

PP.AB

PP.R.BL

Our products are delivered from our factory in the Netherlands.

correspondence address

HeBlad - UK
The Balance, 7th floor, Pinfold Street
S1 2GU Sheffield, South Yorkshire
T. 0114 352 0110
info@HeBlad.co.uk
www.HeBlad.co.uk

head office address

Concrete Foot Volleyball Table Anthracite

Product code: VV.A

£ 3,750.00 excl. VAT
(£ 4,500.00 incl. VAT)

Our products are delivered from our factory in the Netherlands.

12 October 2024 - Prices subject to change

correspondence address

HeBlad - UK
The Balance, 7th floor, Pinfold Street
S1 2GU Sheffield, South Yorkshire
T. 0114 352 0110
info@HeBlad.co.uk
www.HeBlad.co.uk

head office address

HeBlad BV
Diamantweg 22
NL - 5527 LC Hapert

Specifications Concrete Foot Volleyball Table Anthracite

Product code	VV.A	Height tabletop	76 cm
Colour	Antraciet - RAL 7016	Height of the net	14,75 cm
Dimension playing surface (L x W)	274 x 152 cm	Weight	1385 kg
Dimensions bottom base plate	278 x 156 cm	Distance legs	183 cm (center to center
Tabletop thickness	8,4 cm		

Related products

VV.GR

Our products are delivered from our factory in the Netherlands.

correspondence address

HeBlad - UK
The Balance, 7th floor, Pinfold Street
S1 2GU Sheffield, South Yorkshire
T. 0114 352 0110
info@HeBlad.co.uk
www.HeBlad.co.uk

head office address

Foot Volleyball Table Natural Concrete

Product code: VV.NT

£ 3,700.00 excl. VAT
(£ 4,440.00 incl. VAT)

A solid sport-/game table with slightly curved table-top with the dimensions of a ping pong table (274 x 152 cm) This table, like our other tables, are made of one piece of solid concrete.
All sorts of games are possible, usually using a football.
The Foot Volleyball Table is ideal in helping to improve the ball technique at a football club. This means two things at once: playing fun and also improving technique.
In the same way as all HeBlad tables, our Foot Volleyball Table is also resistant to all weather influences. A real showpiece for public (school) squares, parks, playgrounds and sports clubs etc.
This Foot Volleyball Table is made in Natural Concrete, but also available in Anthracite- Concrete, Blue and Green.

We recommend placing the foot volleyball table in an obstacle-free area of

10 x 8 meters.
Agile football players can play with less free space.

Our products are delivered from our factory in the Netherlands.

Registred under: HeBlad BV • HM Revenue and Customs • Ruby House 8 • Ruby Place • AB10 1ZP Aberdeen
VAT Number GB381060225 • EORI Number GB381060225000 • Commercial register (NL) 170 66 364
Rabobank De Kempen, Markt 7, 5531 BA Bladel (NL) • BIC RABONL2U • Branch code RABONL2UXXX • IBAN NL 20 RABO 0107530112 GBP

correspondence address

HeBlad - UK
The Balance, 7th floor, Pinfold Street
S1 2GU Sheffield, South Yorkshire
T. 0114 352 0110
info@HeBlad.co.uk
www.HeBlad.co.uk

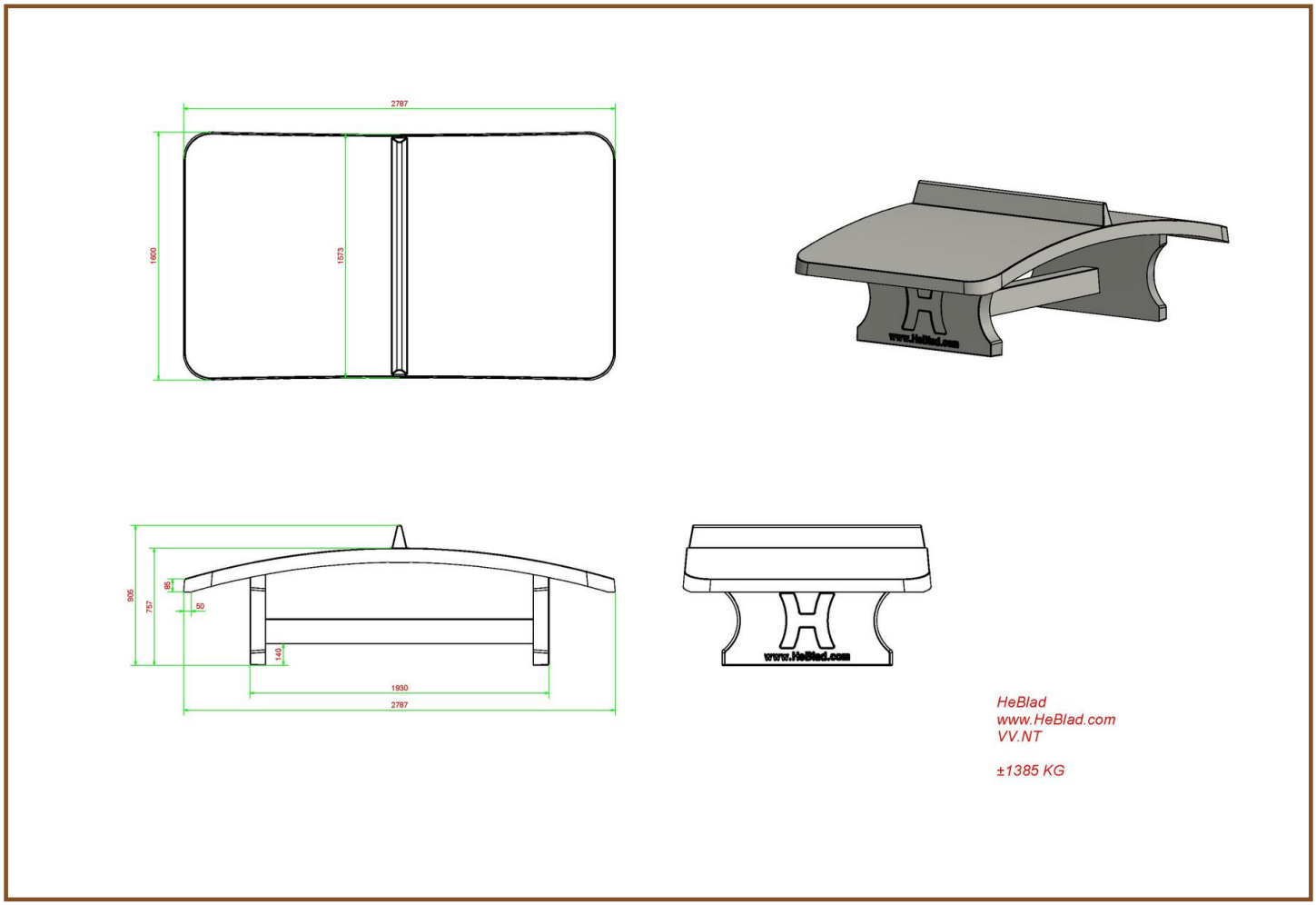

Specifications Foot Volleyball Table Natural Concrete

Product code	VV.NT	Height tabletop	76 cm
Colour	Natural concrete	Height of the net	14,75 cm
Dimension playing surface (L x W)	274 x 152 cm	Weight	1385 kg
Dimensions bottom base plate	278 x 156 cm	Distance legs	183 cm (center to center
Tabletop thickness	8,4 cm		

Related products

VV.AB

PP.GR

PP.AR.BL

BB.CH.AB

PP.R.NT

Our products are delivered from our factory in the Netherlands.

correspondence address

HeBlad - UK
The Balance, 7th floor, Pinfold Street
S1 2GU Sheffield, South Yorkshire
T. 0114 352 0110
info@HeBlad.co.uk
www.HeBlad.co.uk

head office address

Foot Volleyball Table Anthracite-Concrete

Product code: VV.AB

£ 3,850.00 excl. VAT
(£ 4,620.00 incl. VAT)

A very solid sport- and play object with slightly curved tabletop in the dimensions of a ping pong table
(107,9 x 59,8 inch / 274 x 152 cm) made of solid concrete, moulded in one piece.
A table where all kinds of games with a football can be played on.
This table guarantees a lot of fun.
Like all HeBlad products, our Foot Volleyball Table is resistant to all weather influences. Really a show-piece for school yards, parks, in playgrounds at sports clubs etc...
The Foot Volleyball Table is made of Anthracite-Concrete, (solid anthracite colored concrete)
Also available in Natural Conrete, Blue and Green.

We recommend placing the foot volleyball table in an obstacle-free area of

10 x 8 meters.
Agile football players can play with less free space.

Our products are delivered from our factory in the Netherlands.

Registred under: HeBlad BV • HM Revenue and Customs • Ruby House 8 • Ruby Place • AB10 1ZP Aberdeen
VAT Number GB381060225 • EORI Number GB381060225000 • Commercial register (NL) 170 66 364
Rabobank De Kempen, Markt 7, 5531 BA Bladel (NL) • BIC RABONL2U • Branch code RABONL2UXXX • IBAN NL 20 RABO 0107530112 GBP

correspondence address

HeBlad - UK
The Balance, 7th floor, Pinfold Street
S1 2GU Sheffield, South Yorkshire
T. 0114 352 0110
info@HeBlad.co.uk
www.HeBlad.co.uk

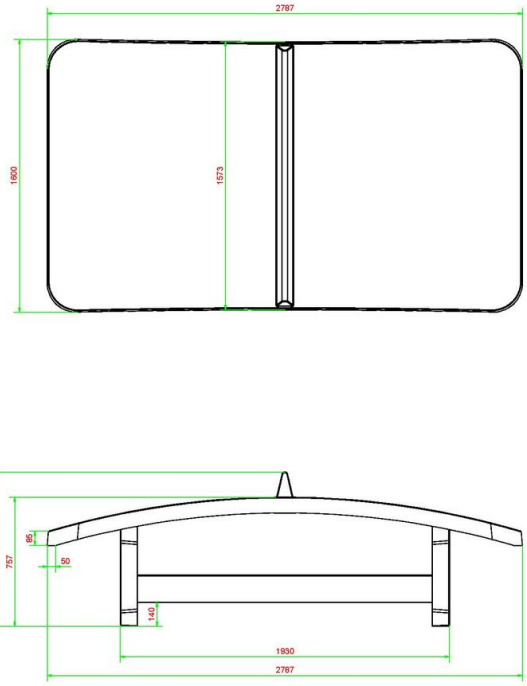

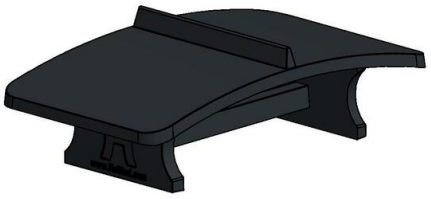

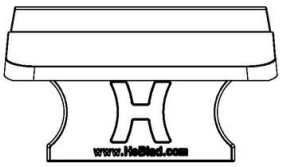

HeBlad
www.HeBlad.com
VV.AB

±1385 KG

Specifications Foot Volleyball Table Anthracite-Concrete

Product code	VV.AB	Height tabletop	76 cm
Colour	Anthracite concrete	Height of the net	14,75 cm
Dimension playing surface (L x W)	274 x 152 cm	Weight	1385 kg
Dimensions bottom base plate	278 x 156 cm	Distance legs	183 cm (center to center
Tabletop thickness	8,4 cm		

Related products

PP.AR.BL

PP.R.NT

PP.GR

BB.CH.AB

PP.AR.AB

Our products are delivered from our factory in the Netherlands.

correspondence address

HeBlad - UK
The Balance, 7th floor, Pinfold Street
S1 2GU Sheffield, South Yorkshire
T. 0114 352 0110
info@HeBlad.co.uk
www.HeBlad.co.uk

head office address

Concrete Table Football Table

Product code: HB.FB.A

£ 3,350.00 excl. VAT
(£ 4,020.00 incl. VAT)

This concrete football table is moulded in one piece of concrete. Sprayed in two-component anthracite lacquer, this table is a beauty to see, and it withstands all weather conditions and is ready to play on. The rotating rods, goals and axle of the counting frame are made of high-quality stainless steel -316. The “scoreboard” is made of Nylon 6.6 as well as the balls and poles. Standard this game is delivered with 11 figures in broken white and 11 figures in black with numbers on the back. The figures are mounted with nuts and bolts in stainless steel quality A4. The figures are made of one-piece plastic. On request the figures and scoreboards can be delivered in red, blue, green and yellow. With each table 6 balls standard white are delivered.

Our products are delivered from our factory in the Netherlands.

Registred under: HeBlad BV • HM Revenue and Customs • Ruby House 8 • Ruby Place • AB10 1ZP Aberdeen
VAT Number GB381060225 • EORI Number GB381060225000 • Commercial register (NL) 170 66 364
Rabobank De Kempen, Markt 7, 5531 BA Bladel (NL) • BIC RABONL2U • Branch code RABONL2UXXX • IBAN NL 20 RABO 0107530112 GBP

correspondence address

HeBlad - UK
The Balance, 7th floor, Pinfold Street
S1 2GU Sheffield, South Yorkshire
T. 0114 352 0110
info@HeBlad.co.uk
www.HeBlad.co.uk

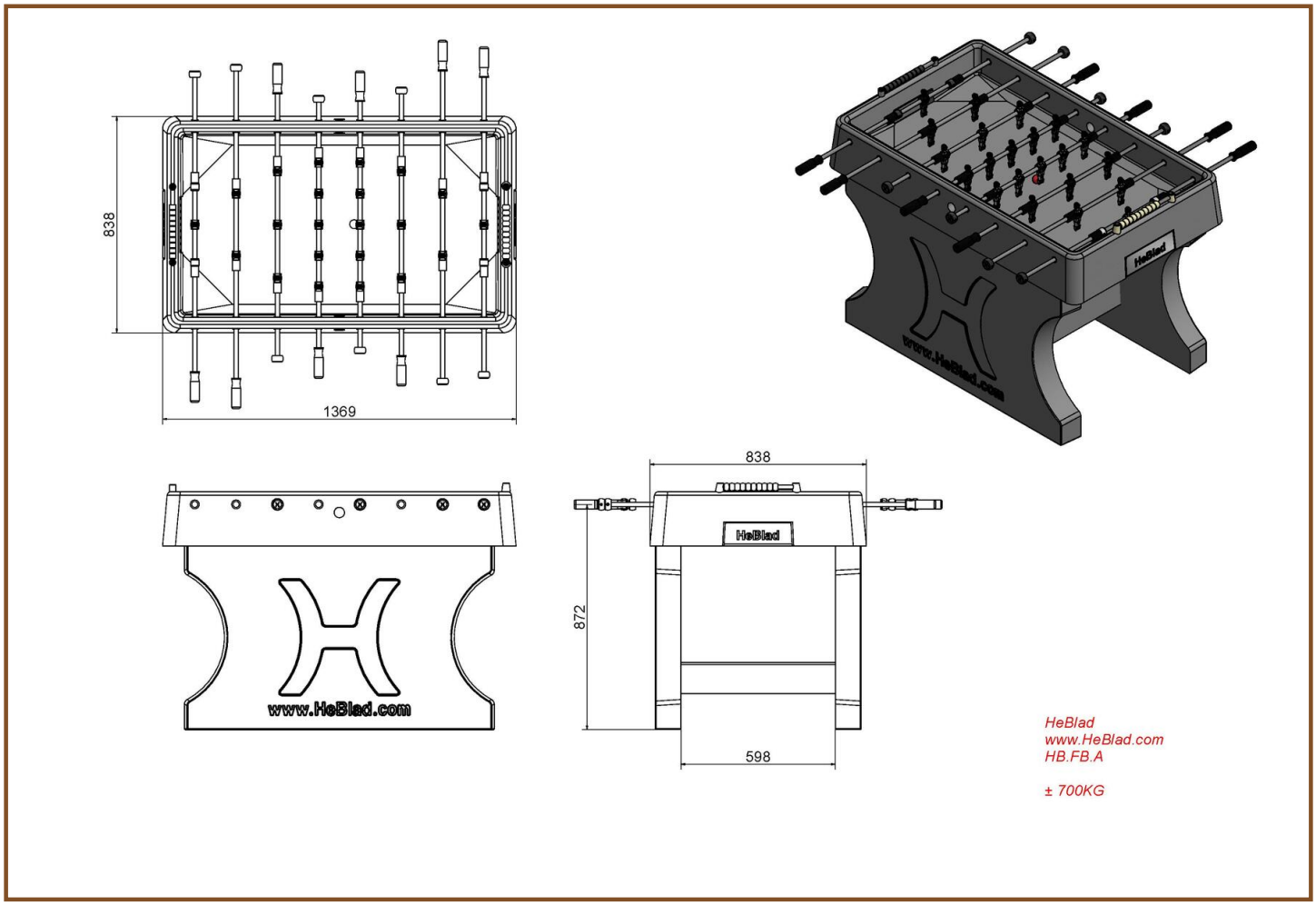

Specifications Concrete Table Football Table

Product code	HB.FB.A	Weight	700 kg
Colour	Anthracite lacquered, RAL 7016	Distance legs	60 cm
Dimensions (L x W x H)	137 x 134 x 95 cm		

Related products

HB.FB.Bumperset

HB.FB.Handle

HB.FB.DOLL.Whit

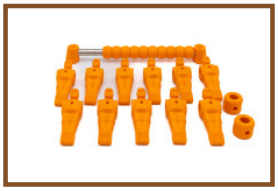
HB.FBSC.set

HB.FB.Rodset

Our products are delivered from our factory in the Netherlands.

correspondence address

HeBlad - UK
The Balance, 7th floor, Pinfold Street
S1 2GU Sheffield, South Yorkshire
T. 0114 352 0110
info@HeBlad.co.uk
www.HeBlad.co.uk

head office address

Chess Bench, Natural Concrete

Product code: BB.CH

£ 2,200.00 excl. VAT
(£ 2,640.00 incl. VAT)

Again a stunning product in our line of game tables and benches. For school yards and public areas an ideal seating to play a game of chess. Think also of city centres, this bench is by its weight ideal as protection against ram raid.

* When ordering one Chess Bench you will receive 1 set of chess pieces free of charge.

Our products are delivered from our factory in the Netherlands.

Registred under: HeBlad BV • HM Revenue and Customs • Ruby House 8 • Ruby Place • AB10 1ZP Aberdeen
VAT Number GB381060225 • EORI Number GB381060225000 • Commercial register (NL) 170 66 364
Rabobank De Kempen, Markt 7, 5531 BA Bladel (NL) • BIC RABONL2U • Branch code RABONL2UXXX • IBAN NL 20 RABO 0107530112 GBP

correspondence address

HeBlad - UK
The Balance, 7th floor, Pinfold Street
S1 2GU Sheffield, South Yorkshire
T. 0114 352 0110
info@HeBlad.co.uk
www.HeBlad.co.uk

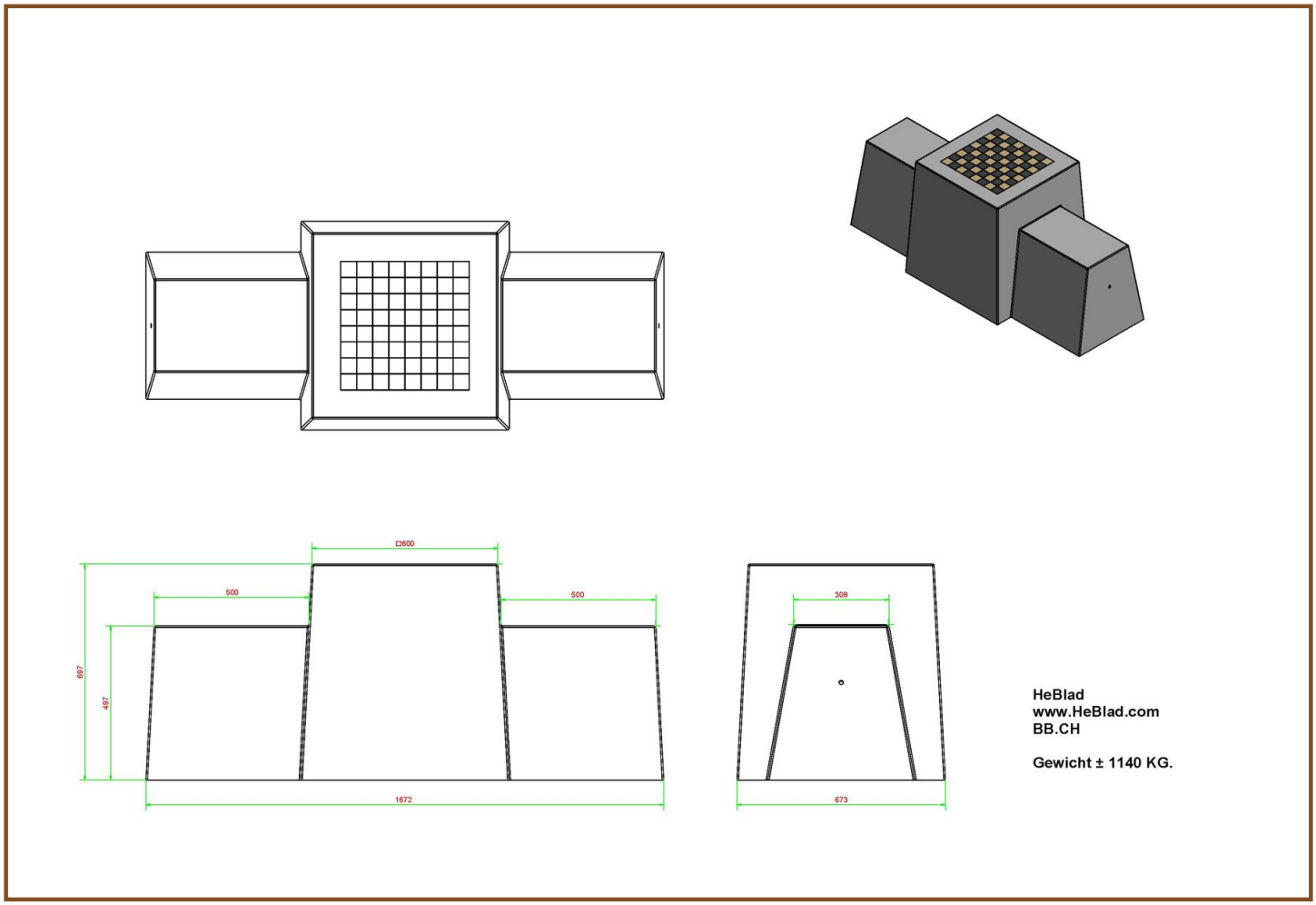

Specifications Chess Bench, Natural Concrete

Product code	BB.CH	Height tabletop	70 cm
Colour	Natural concrete	Weight	1140 kg
Dimensions (L x W x H)	167 x 67 x 70 cm	Number of seats	2
Seat height	50 cm		

Related products

BB.CH.AB

BB.CK

GT.CH.2

GT.CH.Pieces

Our products are delivered from our factory in the Netherlands.

correspondence address

HeBlad - UK
The Balance, 7th floor, Pinfold Street
S1 2GU Sheffield, South Yorkshire
T. 0114 352 0110
info@HeBlad.co.uk
www.HeBlad.co.uk

head office address

Chess Table Natural Concrete (2P)

Product code: GT.CH.2

£ 2,925.00 excl. VAT
(£ 3,510.00 incl. VAT)

This concrete set consists of a bottom plate with a chess table and two seats. Like all other tables and benches of HeBlad, this table is moulded entirely in one piece of high-quality concrete. The bottom plate measures 59 x 149 cm.

In case you want to place the table in a park, the plate can be levelled with the grass so that the upper side of the concrete plate matches the cutting height.

Placing is included in the price. Preliminary work must be finished before delivery. This concrete Chess Table is made of natural concrete. The “Concrete-look” is an imposing picture.

The 64 fields (32 white and 32 black) are made of marble and hard granite rock and integrated into the concrete.
The table is weatherproof.

By ordering this chess table you receive 1 set of chess figures with the delivery, free of charge.

Our products are delivered from our factory in the Netherlands.

Registred under: HeBlad BV • HM Revenue and Customs • Ruby House 8 • Ruby Place • AB10 1ZP Aberdeen
VAT Number GB381060225 • EORI Number GB381060225000 • Commercial register (NL) 170 66 364
Rabobank De Kempen, Markt 7, 5531 BA Bladel (NL) • BIC RABONL2U • Branch code RABONL2UXXX • IBAN NL 20 RABO 0107530112 GBP

correspondence address

HeBlad - UK
The Balance, 7th floor, Pinfold Street
S1 2GU Sheffield, South Yorkshire
T. 0114 352 0110
info@HeBlad.co.uk
www.HeBlad.co.uk

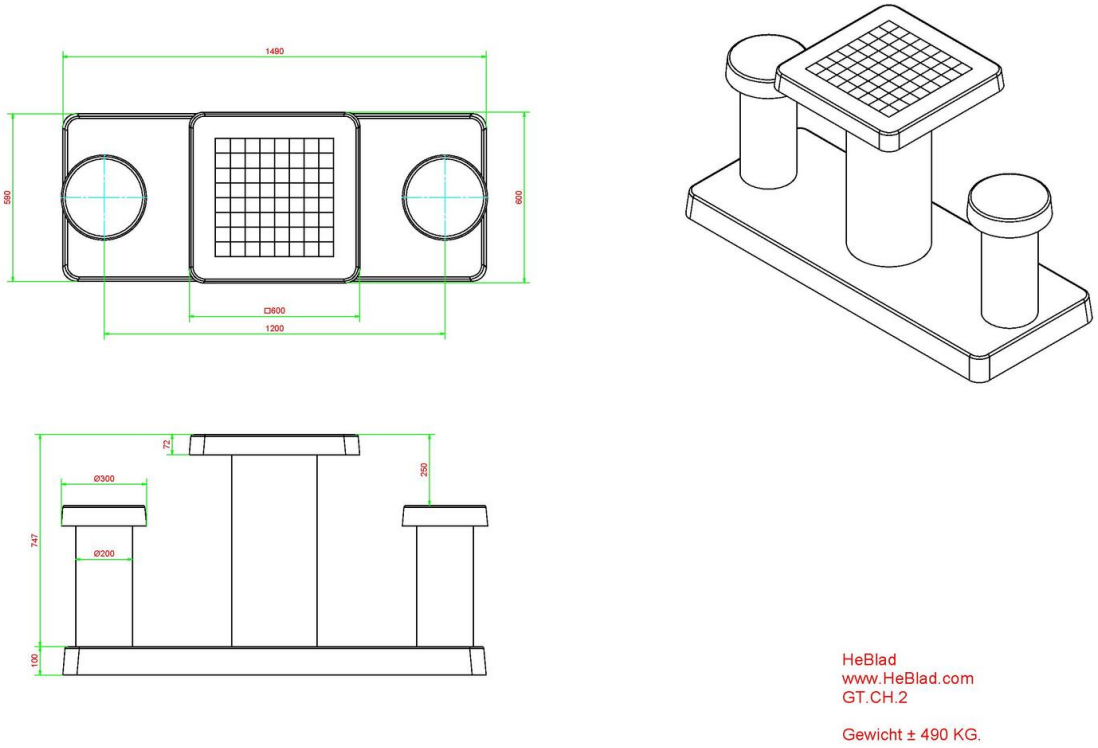

Specifications Chess Table Natural Concrete (2P)

Product code	GT.CH.2	Height tabletop	75 cm
Colour	Natural concrete	Seat height	50 cm
Dimensions (L x W x H)	149 x 60 x 85 cm	Dimensions base plate (L x W x H)	120 x 60 x 10 cm
Dimensions tabletop (L x W)	60 x 60 cm	Weight	425 kg
Tabletop thickness	7 cm		

Related products

GT.CH.AB2

GT.CK.4

BB.CH

GT.CH.Pieces

PS.DLAB.GT.132

Our products are delivered from our factory in the Netherlands.

correspondence address

HeBlad - UK
The Balance, 7th floor, Pinfold Street
S1 2GU Sheffield, South Yorkshire
T. 0114 352 0110
info@HeBlad.co.uk
www.HeBlad.co.uk

head office address

Chess Table Natural Concrete (4P)

Product code: GT.CH.4

£ 3,125.00 excl. VAT
(£ 3,750.00 incl. VAT)

This concrete set consists of a bottom plate with a chess table and four seats. Like all other tables and benches of HeBlad, this table is moulded entirely in one piece of high-quality concrete. The bottom plate measures 149 x 149 cm.

In case you want to place the table in a park, the plate can be levelled with the grass so that the upper side of the concrete plate matches the cutting height.

Placing is included in the price. Preliminary work must be finished before delivery. This concrete Chess Table is made of natural concrete. The “Concrete-look” is an imposing picture.

The 64 fields (32 white and 32 black) are made of marble and hard granite rock and integrated into the concrete.
The table is weatherproof.

By ordering this chess table you receive 1 sets of chess figures with the delivery, free of charge.

Our products are delivered from our factory in the Netherlands.

Registred under: HeBlad BV • HM Revenue and Customs • Ruby House 8 • Ruby Place • AB10 1ZP Aberdeen
VAT Number GB381060225 • EORI Number GB381060225000 • Commercial register (NL) 170 66 364
Rabobank De Kempen, Markt 7, 5531 BA Bladel (NL) • BIC RABONL2U • Branch code RABONL2UXXX • IBAN NL 20 RABO 0107530112 GBP

correspondence address

HeBlad - UK
The Balance, 7th floor, Pinfold Street
S1 2GU Sheffield, South Yorkshire
T. 0114 352 0110
info@HeBlad.co.uk
www.HeBlad.co.uk

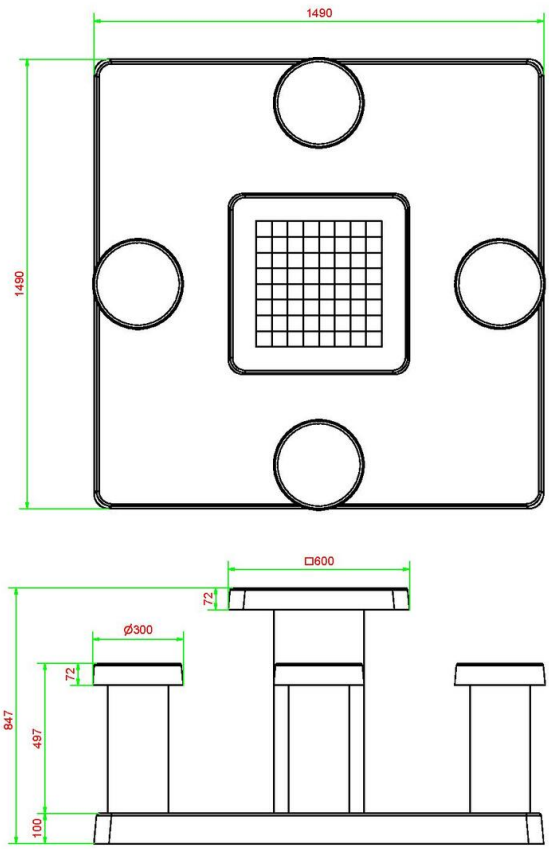

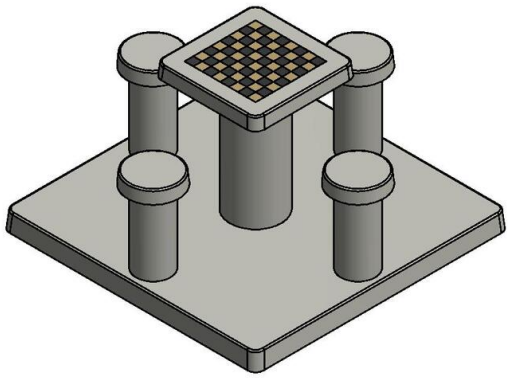

HeBlad
www.HeBlad.com
GT.CH.4

± 900 KG.

Specifications Chess Table Natural Concrete (4P)

Product code	GT.CH.4	Height tabletop	75 cm
Colour	Natural concrete	Seat height	50 cm
Dimensions (L x W x H)	149 x 149 x 85 cm	Dimensions base plate (L x W x H)	149 x 149 x 10 cm
Dimensions tabletop (L x W)	60 x 60 cm	Weight	900 kg
Tabletop thickness	7 cm		

Related products

GT.LD.AB4

GT.CH.2

BB.CK.AB

GT.CH.Pieces

PS.DLAB.GT.132

Our products are delivered from our factory in the Netherlands.

correspondence address

HeBlad - UK
The Balance, 7th floor, Pinfold Street
S1 2GU Sheffield, South Yorkshire
T. 0114 352 0110
info@HeBlad.co.uk
www.HeBlad.co.uk

head office address

Chess Bench, Anthracite-Concrete

Product code: BB.CH.AB

£ 2,275.00 excl. VAT
(£ 2,730.00 incl. VAT)

An expressive version in Anthracite-Concrete, this Chess Bench, in unique design, suitable for any location where a bench or game table is in place. Think of school yards, parks, city centres. This bench is also ideal for protection against ram raid.

* When ordering one Chess Bench you will receive 1 set of chess pieces free of charge.

Our products are delivered from our factory in the Netherlands.

Registred under: HeBlad BV • HM Revenue and Customs • Ruby House 8 • Ruby Place • AB10 1ZP Aberdeen
VAT Number GB381060225 • EORI Number GB381060225000 • Commercial register (NL) 170 66 364
Rabobank De Kempen, Markt 7, 5531 BA Bladel (NL) • BIC RABONL2U • Branch code RABONL2UXXX • IBAN NL 20 RABO 0107530112 GBP

correspondence address

HeBlad - UK
The Balance, 7th floor, Pinfold Street
S1 2GU Sheffield, South Yorkshire
T. 0114 352 0110
info@HeBlad.co.uk
www.HeBlad.co.uk

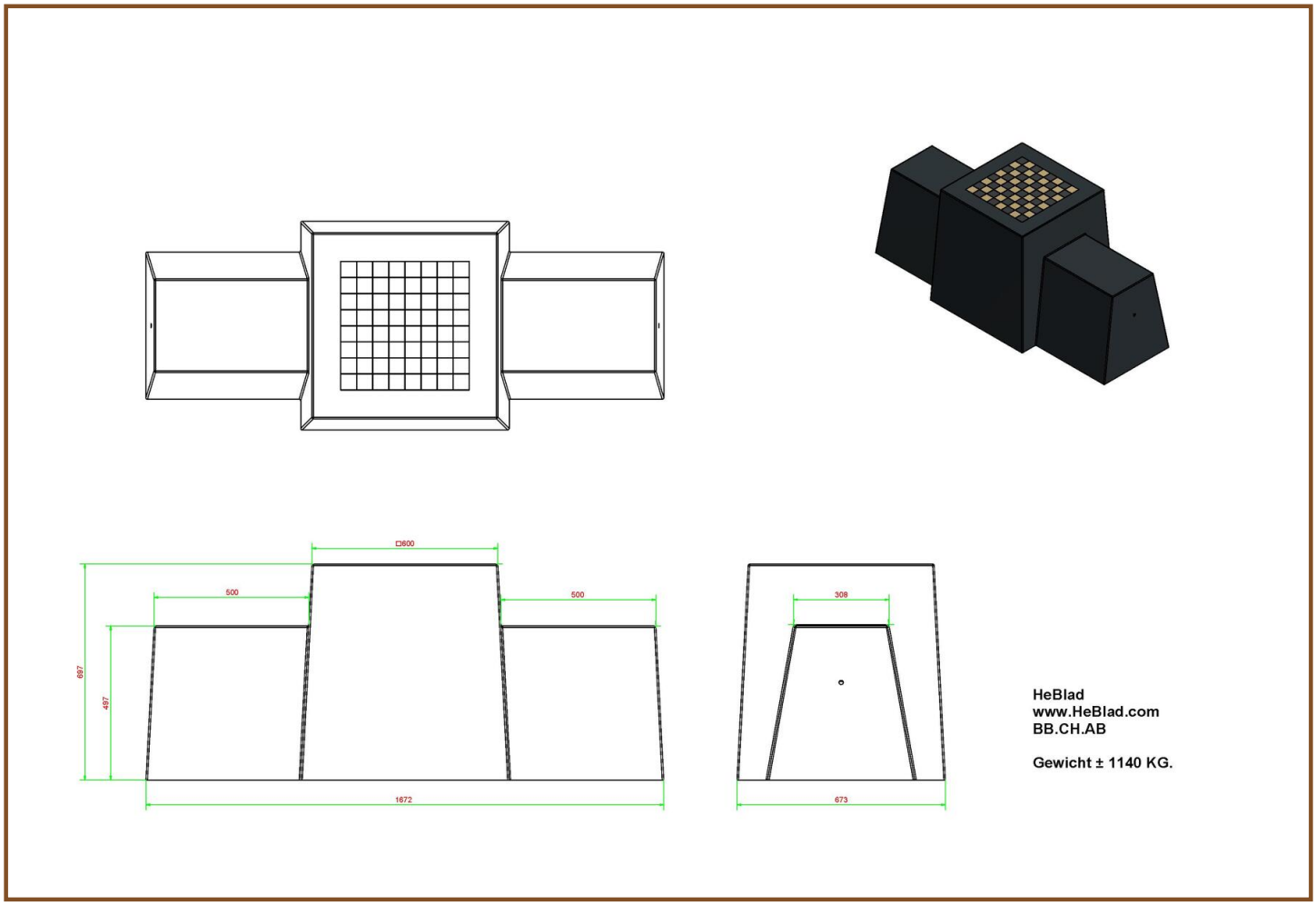

Specifications Chess Bench, Anthracite-Concrete

Product code	BB.CH.AB	Height tabletop	70 cm
Colour	Antraciet-beton	Weight	1140 kg
Dimensions (L x W x H)	167 x 67 x 70 cm	Number of seats	2
Seat height	50 cm		

Related products

BB.CH

BB.CK.AB

GT.CH.AB2

GT.CH.Pieces

Our products are delivered from our factory in the Netherlands.

correspondence address

HeBlad - UK
The Balance, 7th floor, Pinfold Street
S1 2GU Sheffield, South Yorkshire
T. 0114 352 0110
info@HeBlad.co.uk
www.HeBlad.co.uk

head office address

Chess Table Anthracite-Concrete (2P)

Product code: GT.CH.AB2

£ 3,025.00 excl. VAT
(£ 3,630.00 incl. VAT)

This concrete set consists of a bottom plate with a chess table and two seats. Like all other tables and benches of HeBlad, this table is moulded entirely in one piece of high-quality concrete. The bottom plate measures 59 x 149 cm.

In case you want to place the table in a park, the plate can be levelled with the grass so that the upper side of the concrete plate matches the cutting height.

Placing is included in the price. Preliminary work must be finished before delivery. This concrete Chess Table is made of anthracite-coloured concrete. The anthracite “concrete-look” is an aesthetic sight.
The 64 fields (32 white and 32 black) are made of marble and hard granite rock and integrated into the concrete.
The table is weatherproof.

By ordering this chess table you receive 1 set of chess figures with the delivery, free of charge.

Our products are delivered from our factory in the Netherlands.

12 October 2024 - Prices subject to change

correspondence address

HeBlad - UK
The Balance, 7th floor, Pinfold Street
S1 2GU Sheffield, South Yorkshire
T. 0114 352 0110
info@HeBlad.co.uk
www.HeBlad.co.uk

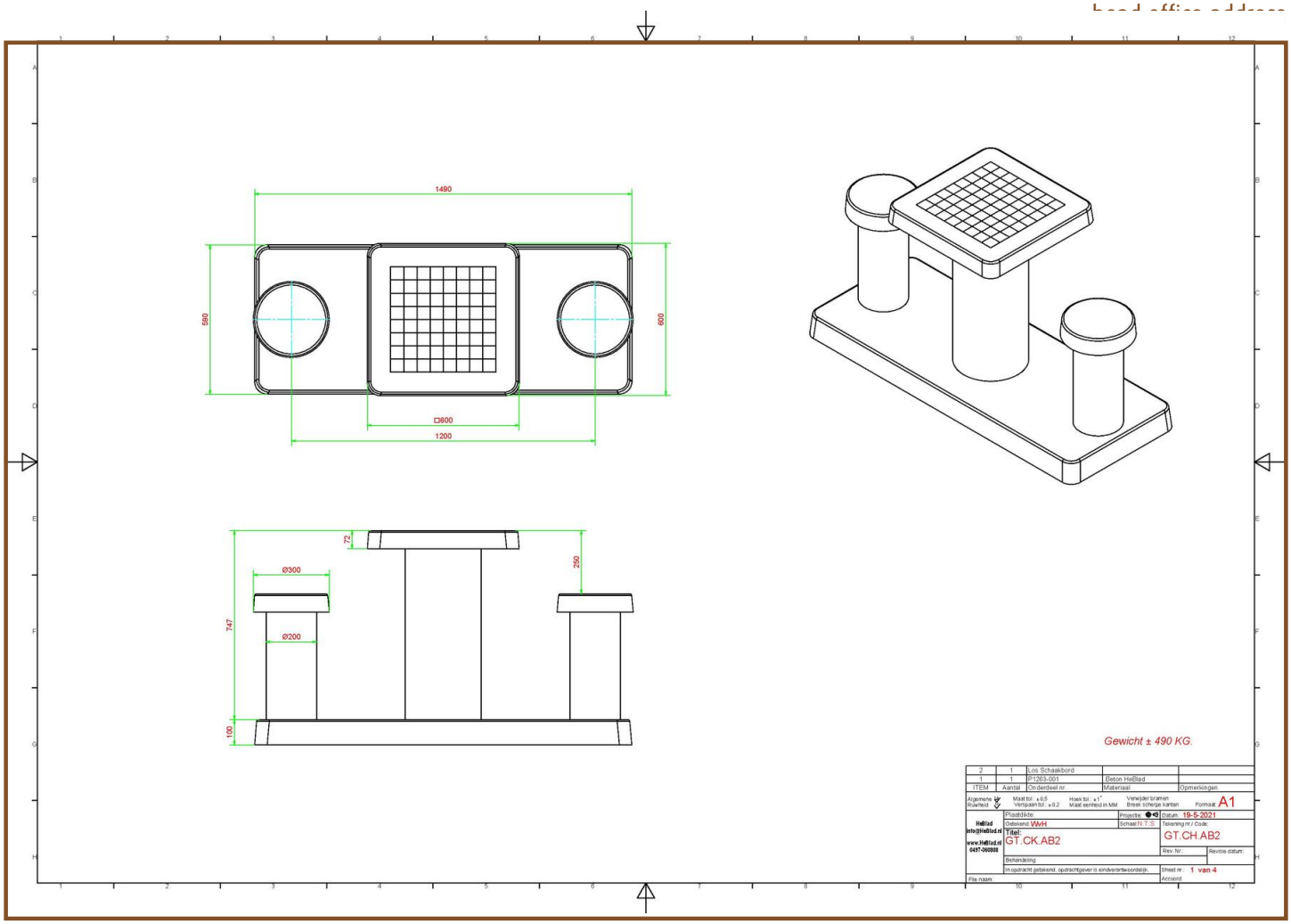

Specifications Chess Table Anthracite-Concrete (2P)

Product code	GT.CH.AB2	Height tabletop	75 cm
Colour	Anthracite concrete	Seat height	50 cm
Dimensions (L x W x H)	149 x 60 x 85 cm	Dimensions base plate (L x W x H)	120 x 60 x 10 cm
Dimensions tabletop (L x W)	60 x 60 cm	Weight	425 kg
Tabletop thickness	7 cm		

Related products

GT.CH.2

GT.CK.AB4

BB.CK.AB

GT.CH.Pieces

PS.DL.GT.132

Our products are delivered from our factory in the Netherlands.

correspondence address

HeBlad - UK
The Balance, 7th floor, Pinfold Street
S1 2GU Sheffield, South Yorkshire
T. 0114 352 0110
info@HeBlad.co.uk
www.HeBlad.co.uk

head office address

Chess Table Anthracite-Concrete (4P)

Product code: GT.CH.AB4

£ 3,325.00 excl. VAT
(£ 3,990.00 incl. VAT)

This concrete set consists of a bottom plate with a chess table and four seats. Like all other tables and benches of HeBlad, this table is moulded entirely in one piece of high-quality concrete. The bottom plate measures 149 x 149 cm.

In case you want to place the table in a park, the plate can be levelled with the grass so that the upper side of the concrete plate matches the cutting height.

Placing is included in the price. Preliminary work must be finished before delivery.
This concrete Chess Table is made of anthracite-coloured concrete. The anthracite “concrete-look” is an aesthetic sight.
The 64 fields (32 white and 32 black) are made of marble and hard granite rock and integrated into the concrete.
The table is weatherproof.

By ordering this chess table you receive 1 set of chess figures with the delivery, free of charge.

Our products are delivered from our factory in the Netherlands.

Registred under: HeBlad BV • HM Revenue and Customs • Ruby House 8 • Ruby Place • AB10 1ZP Aberdeen
VAT Number GB381060225 • EORI Number GB381060225000 • Commercial register (NL) 170 66 364
Rabobank De Kempen, Markt 7, 5531 BA Bladel (NL) • BIC RABONL2U • Branch code RABONL2UXXX • IBAN NL 20 RABO 0107530112 GBP

correspondence address

HeBlad - UK
The Balance, 7th floor, Pinfold Street
S1 2GU Sheffield, South Yorkshire
T. 0114 352 0110
info@HeBlad.co.uk
www.HeBlad.co.uk

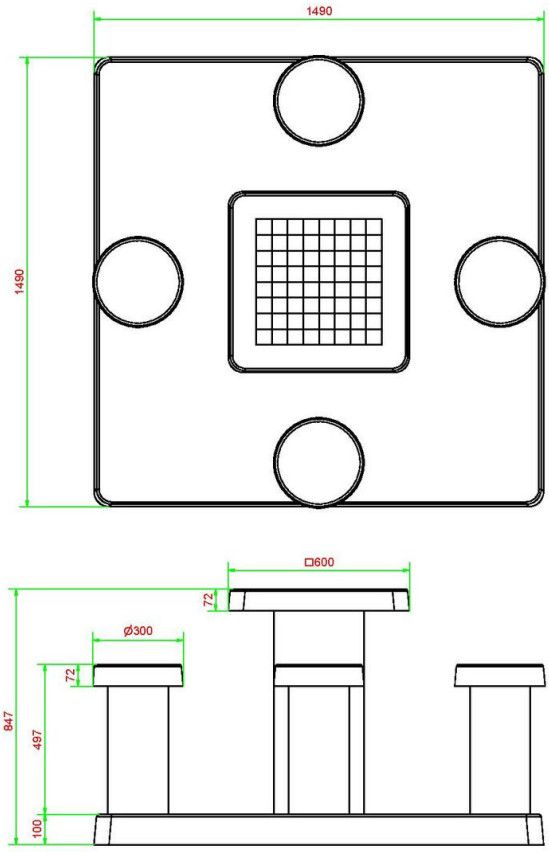

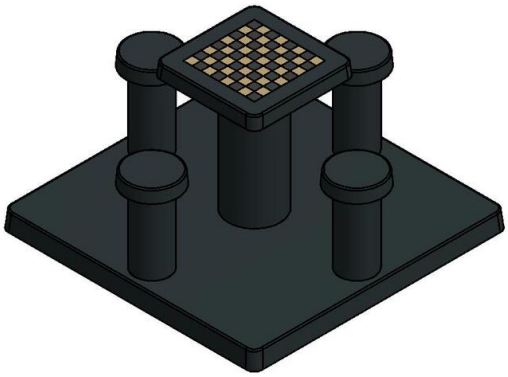

HeBlad
www.HeBlad.com
GT.CH.AB4

± 900 KG.

Specifications Chess Table Anthracite-Concrete (4P)

Product code	GT.CH.AB4	Height tabletop	75 cm
Colour	Anthracite concrete	Seat height	50 cm
Dimensions (L x W x H)	149 x 149 x 85 cm	Dimensions base plate (L x W x H)	149 x 149 x 10 cm
Dimensions tabletop (L x W)	60 x 60 cm	Weight	900 kg
Tabletop thickness	7 cm		

Related products

GT.CH.G4

GT.CK.AB2

BB.CH.AB

GT.CH.Pieces

PS.DL.GT.132

Our products are delivered from our factory in the Netherlands.

correspondence address

HeBlad - UK
The Balance, 7th floor, Pinfold Street
S1 2GU Sheffield, South Yorkshire
T. 0114 352 0110
info@HeBlad.co.uk
www.HeBlad.co.uk

head office address

Backgammon Bench, Natural Concrete

Product code: BB.BG

£ 2,400.00 excl. VAT
(£ 2,880.00 incl. VAT)

Our products are delivered from our factory in the Netherlands.

12 October 2024 - Prices subject to change

correspondence address

HeBlad - UK
The Balance, 7th floor, Pinfold Street
S1 2GU Sheffield, South Yorkshire
T. 0114 352 0110
info@HeBlad.co.uk
www.HeBlad.co.uk

head office address

HeBlad BV
Diamantweg 22
NL - 5527 LC Hapert

Specifications Backgammon Bench, Natural Concrete

Product code	BB.BG	Height tabletop	70 cm
Colour	Natural concrete	Weight	1140 kg
Dimensions (L x W x H)	167 x 67 x 70 cm	Number of seats	2
Seat height	50 cm		

Our products are delivered from our factory in the Netherlands.

correspondence address

HeBlad - UK
The Balance, 7th floor, Pinfold Street
S1 2GU Sheffield, South Yorkshire
T. 0114 352 0110
info@HeBlad.co.uk
www.HeBlad.co.uk

head office address

Backgammon Table Natural Concrete (2P)

Product code: GT.BG.2

£ 3,125.00 excl. VAT
(£ 3,750.00 incl. VAT)

Our products are delivered from our factory in the Netherlands.

13 October 2024 - Prices subject to change

correspondence address

HeBlad - UK
The Balance, 7th floor, Pinfold Street
S1 2GU Sheffield, South Yorkshire
T. 0114 352 0110
info@HeBlad.co.uk
www.HeBlad.co.uk

head office address

HeBlad BV
Diamantweg 22
NL - 5527 LC Hapert

Specifications Backgammon Table Natural Concrete (2P)

Product code	GT.BG.2	Height tabletop	75 cm
Colour	Natural concrete	Seat height	50 cm
Dimensions (L x W x H)	149 x 59 x 85 cm	Dimensions base plate (L x W x H)	120 x 60 x 10 cm
Dimensions tabletop (L x W)	60 x 60 cm	Weight	425 kg
Tabletop thickness	7 cm		

Our products are delivered from our factory in the Netherlands.

correspondence address

HeBlad - UK
The Balance, 7th floor, Pinfold Street
S1 2GU Sheffield, South Yorkshire
T. 0114 352 0110
info@HeBlad.co.uk
www.HeBlad.co.uk

head office address

Backgammon Table Natural Concrete (4P)

Product code: GT.BG.4

£ 3,325.00 excl. VAT
(£ 3,990.00 incl. VAT)

Our products are delivered from our factory in the Netherlands.

12 October 2024 - Prices subject to change

correspondence address

HeBlad - UK
The Balance, 7th floor, Pinfold Street
S1 2GU Sheffield, South Yorkshire
T. 0114 352 0110
info@HeBlad.co.uk
www.HeBlad.co.uk

head office address

HeBlad BV
Diamantweg 22
NL - 5527 LC Hapert

Specifications Backgammon Table Natural Concrete (4P)

Product code	GT.BG.4	Height tabletop	75 cm
Colour	Natural concrete	Seat height	50 cm
Dimensions (L x W x H)	149 x 149 x 85 cm	Dimensions base plate (L x W x H)	149 x 149 x 10 cm
Dimensions tabletop (L x W)	60 x 60 cm	Weight	900 kg
Tabletop thickness	7 cm		

Our products are delivered from our factory in the Netherlands.

correspondence address

HeBlad - UK
The Balance, 7th floor, Pinfold Street
S1 2GU Sheffield, South Yorkshire
T. 0114 352 0110
info@HeBlad.co.uk
www.HeBlad.co.uk

head office address

Backgammon Bench, Anthracite-Concrete

Product code: BB.BG.AB

£ 2,475.00 excl. VAT
(£ 2,970.00 incl. VAT)

Our products are delivered from our factory in the Netherlands.

12 October 2024 - Prices subject to change

correspondence address

HeBlad - UK
The Balance, 7th floor, Pinfold Street
S1 2GU Sheffield, South Yorkshire
T. 0114 352 0110
info@HeBlad.co.uk
www.HeBlad.co.uk

head office address

HeBlad BV
Diamantweg 22
NL - 5527 LC Hapert

Specifications Backgammon Bench, Anthracite-Concrete

Product code	BB.BG.AB	Height tabletop	70 cm
Colour	Anthracite concrete	Weight	1140 kg
Dimensions (L x W x H)	167 x 67 x 70 cm	Number of seats	2
Seat height	50 cm		

Our products are delivered from our factory in the Netherlands.

correspondence address

HeBlad - UK
The Balance, 7th floor, Pinfold Street
S1 2GU Sheffield, South Yorkshire
T. 0114 352 0110
info@HeBlad.co.uk
www.HeBlad.co.uk

head office address

Backgammon Table Anthracite-Concrete (2P)

Product code: GT.BG.AB2

£ 3,225.00 excl. VAT
(£ 3,870.00 incl. VAT)

Our products are delivered from our factory in the Netherlands.

12 October 2024 - Prices subject to change

correspondence address

HeBlad - UK
The Balance, 7th floor, Pinfold Street
S1 2GU Sheffield, South Yorkshire
T. 0114 352 0110
info@HeBlad.co.uk
www.HeBlad.co.uk

head office address

HeBlad BV
Diamantweg 22
NL - 5527 LC Hapert

Specifications Backgammon Table Anthracite-Concrete (2P)

Product code	GT.BG.AB2	Height tabletop	75 cm
Colour	Anthracite concrete	Seat height	50 cm
Dimensions (L x W x H)	149 x 59 x 85 cm	Dimensions base plate (L x W x H)	120 x 60 x 10 cm
Dimensions tabletop (L x W)	60 x 60 cm	Weight	425 kg
Tabletop thickness	7 cm		

Our products are delivered from our factory in the Netherlands.

correspondence address

HeBlad - UK
The Balance, 7th floor, Pinfold Street
S1 2GU Sheffield, South Yorkshire
T. 0114 352 0110
info@HeBlad.co.uk
www.HeBlad.co.uk

head office address

Backgammon Table Anthracite-Concrete (4P)

Product code: GT.BG.AB4

£ 3,425.00 excl. VAT
(£ 4,110.00 incl. VAT)

Our products are delivered from our factory in the Netherlands.

13 October 2024 - Prices subject to change

correspondence address

HeBlad - UK
The Balance, 7th floor, Pinfold Street
S1 2GU Sheffield, South Yorkshire
T. 0114 352 0110
info@HeBlad.co.uk
www.HeBlad.co.uk

head office address

HeBlad BV
Diamantweg 22
NL - 5527 LC Hapert

Specifications Backgammon Table Anthracite-Concrete (4P)

Product code	GT.BG.AB4	Height tabletop	75 cm
Colour	Anthracite concrete	Seat height	50 cm
Dimensions (L x W x H)	149 x 149 x 85 cm	Dimensions base plate (L x W x H)	149 x 149 x 10 cm
Dimensions tabletop (L x W)	60 x 60 cm	Weight	900 kg
Tabletop thickness	7 cm		

Our products are delivered from our factory in the Netherlands.

correspondence address

HeBlad - UK
The Balance, 7th floor, Pinfold Street
S1 2GU Sheffield, South Yorkshire
T. 0114 352 0110
info@HeBlad.co.uk
www.HeBlad.co.uk

head office address

Checkers/Drafts Bench, Natural Concrete

Product code: BB.CK

£ 2,250.00 excl. VAT
(£ 2,700.00 incl. VAT)

A beautiful bench with a tabletop for a game of draughts. Especially for outdoors, like all our HeBlad products.
Ideal for school yards, parks or city centres. But this bench is also particularly suitable as protection against ram raid. Carried out in natural concrete.

* When ordering one Checkers/Drafts Bench you will receive 1 set of drafts with it.

Our products are delivered from our factory in the Netherlands.

Registred under: HeBlad BV • HM Revenue and Customs • Ruby House 8 • Ruby Place • AB10 1ZP Aberdeen
VAT Number GB381060225 • EORI Number GB381060225000 • Commercial register (NL) 170 66 364
Rabobank De Kempen, Markt 7, 5531 BA Bladel (NL) • BIC RABONL2U • Branch code RABONL2UXXX • IBAN NL 20 RABO 0107530112 GBP

correspondence address

HeBlad - UK
The Balance, 7th floor, Pinfold Street
S1 2GU Sheffield, South Yorkshire
T. 0114 352 0110
info@HeBlad.co.uk
www.HeBlad.co.uk

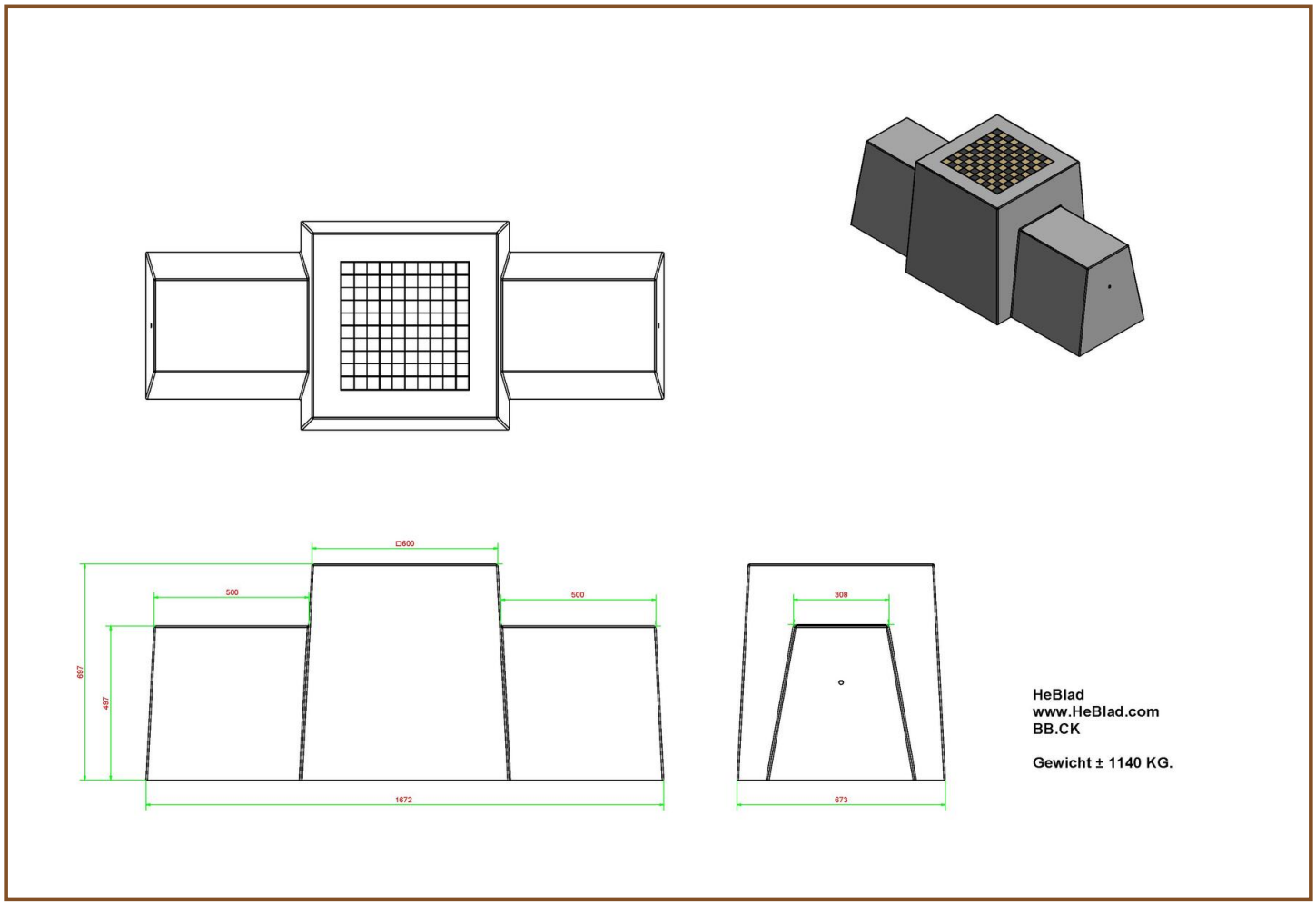

Specifications Checkers/Drafts Bench, Natural Concrete

Product code	BB.CK	Height tabletop	70 cm
Colour	Natural concrete	Weight	1140 kg
Dimensions (L x W x H)	167 x 67 x 70 cm	Number of seats	2
Seat height	50 cm		

Related products

BB.CK.AB

BB.CH

GT.CK.2

GT.CK.Pieces

GT.CH.4

Our products are delivered from our factory in the Netherlands.

correspondence address

HeBlad - UK
The Balance, 7th floor, Pinfold Street
S1 2GU Sheffield, South Yorkshire
T. 0114 352 0110
info@HeBlad.co.uk
www.HeBlad.co.uk

head office address

Checkers/Drafts Table Natural Concrete (2P)

Product code: GT.CK.2

£ 2,975.00 excl. VAT
(£ 3,570.00 incl. VAT)

This concrete set consists of a bottom plate with a draughts table and two seats. Very elegant looking table to play on, suitable for any place where Young and Old are looking for entertainment and fun.
The 100 fields (50 white and 50 black) are made of marble and hard granite rock, natural stones, which are integrated into the concrete by us.

The bottom plate measures 59 x 149 cm. By removing 2 x 5 paving stones from the schoolyard a space of 60 x 150 cm is created. We want to place the table in this “gap” so that the bottom plate is fully integrated into the schoolyards pavement.

In case, you want to place the table in a park, the plate can be levelled with the grass so that the upper side of the concrete plate matches the cutting height.

Placing is included in the price. Preliminary work must be finished before delivery. Like all other tables and benches of HeBlad, this table is moulded entirely in one piece of high quality concrete.

This concrete Chess Table is made of natural concrete. The “Concrete-look” is an imposing picture.

Our products are delivered from our factory in the Netherlands.

12 October 2024 - Prices subject to change

correspondence address

HeBlad - UK
The Balance, 7th floor, Pinfold Street
S1 2GU Sheffield, South Yorkshire
T. 0114 352 0110
info@HeBlad.co.uk
www.HeBlad.co.uk

head office address

HeBlad BV
Diamantweg 22
NL - 5527 LC Hapert

The table is weatherproof.

Our products are delivered from our factory in the Netherlands.

correspondence address

HeBlad - UK
The Balance, 7th floor, Pinfold Street
S1 2GU Sheffield, South Yorkshire
T. 0114 352 0110
info@HeBlad.co.uk
www.HeBlad.co.uk

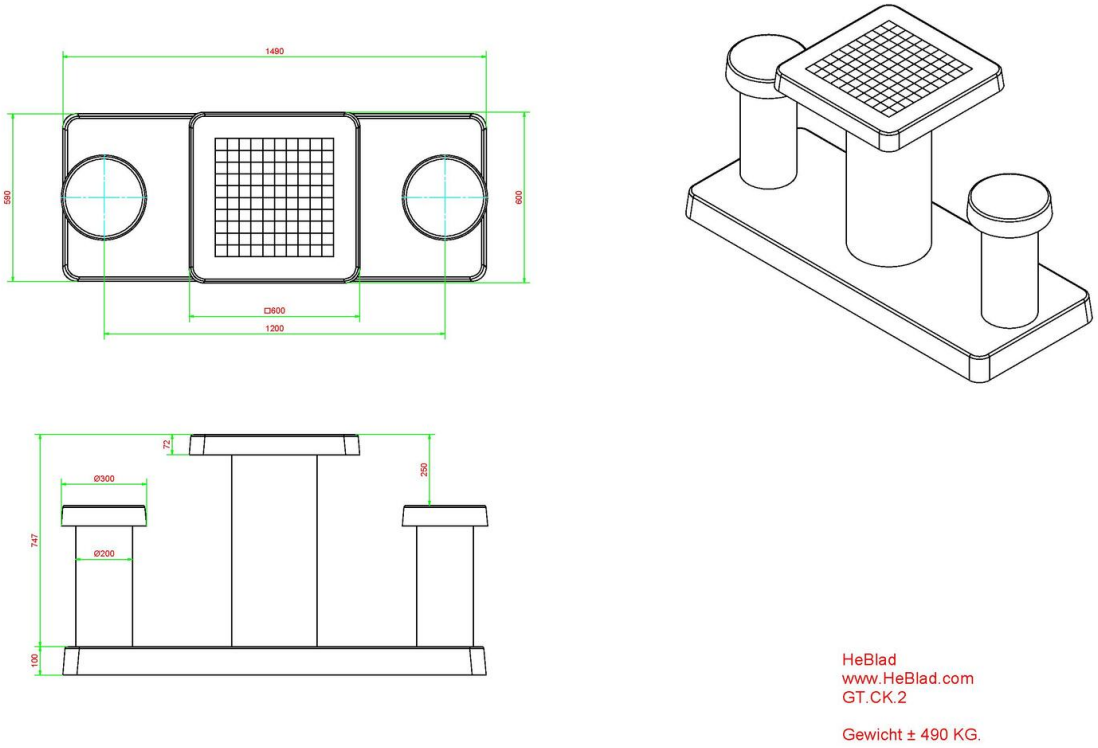

Specifications Checkers/Drafts Table Natural Concrete (2P)

Product code	GT.CK.2	Height tabletop	75 cm
Colour	Natural concrete	Seat height	50 cm
Dimensions (L x W x H)	149 x 59 x 85 cm	Dimensions base plate (L x W x H)	120 x 60 x 10 cm
Dimensions tabletop (L x W)	60 x 60 cm	Weight	425 kg
Tabletop thickness	7 cm		

Related products

GT.CK.AB2

GT.CH.4

BB.CK

GT.CK.Pieces

PS.DLAB.GT.132

Our products are delivered from our factory in the Netherlands.

correspondence address

HeBlad - UK
The Balance, 7th floor, Pinfold Street
S1 2GU Sheffield, South Yorkshire
T. 0114 352 0110
info@HeBlad.co.uk
www.HeBlad.co.uk

head office address

Checkers/Drafts Table Natural Concrete (4P)

Product code: GT.CK.4

£ 3,175.00 excl. VAT
(£ 3,810.00 incl. VAT)

This concrete set consists of a bottom plate with a draughts table and four seats. Very elegant looking table to play on, suitable for any place where Young and Old are looking for entertainment and fun.
The 100 fields (50 white and 50 black) are made of marble and hard granite rock, natural stones, which are integrated into the concrete by us.

The bottom plate measures 59 x 149 cm. By removing 2 x 5 paving stones from the schoolyard a space of 60 x 150 cm is created. We want to place the table in this “gap” so that the bottom plate is fully integrated into the schoolyards pavement.

In case, you want to place the table in a park, the plate can be levelled with the grass so that the upper side of the concrete plate matches the cutting height.

Placing is included in the price. Preliminary work must be finished before delivery. Like all other tables and benches of HeBlad, this table is moulded entirely in one piece of high quality concrete.

This concrete Chess Table is made of natural concrete. The “Concrete-look” is an imposing picture.

Our products are delivered from our factory in the Netherlands.

Registred under: HeBlad BV • HM Revenue and Customs • Ruby House 8 • Ruby Place • AB10 1ZP Aberdeen
VAT Number GB381060225 • EORI Number GB381060225000 • Commercial register (NL) 170 66 364
Rabobank De Kempen, Markt 7, 5531 BA Bladel (NL) • BIC RABONL2U • Branch code RABONL2UXXX • IBAN NL 20 RABO 0107530112 GBP

correspondence address

HeBlad - UK
The Balance, 7th floor, Pinfold Street
S1 2GU Sheffield, South Yorkshire
T. 0114 352 0110
info@HeBlad.co.uk
www.HeBlad.co.uk

head office address

HeBlad BV
Diamantweg 22
NL - 5527 LC Hapert

The table is weatherproof.

Our products are delivered from our factory in the Netherlands.

correspondence address

HeBlad - UK
The Balance, 7th floor, Pinfold Street
S1 2GU Sheffield, South Yorkshire
T. 0114 352 0110
info@HeBlad.co.uk
www.HeBlad.co.uk

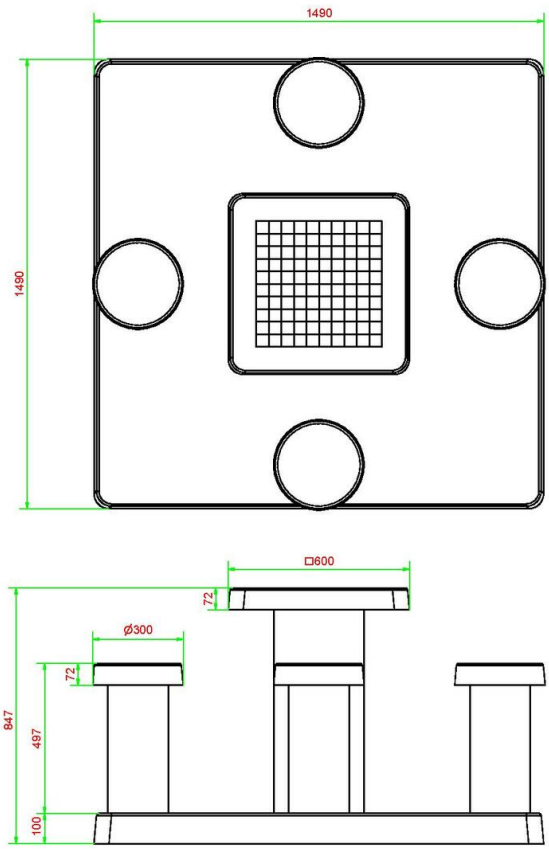

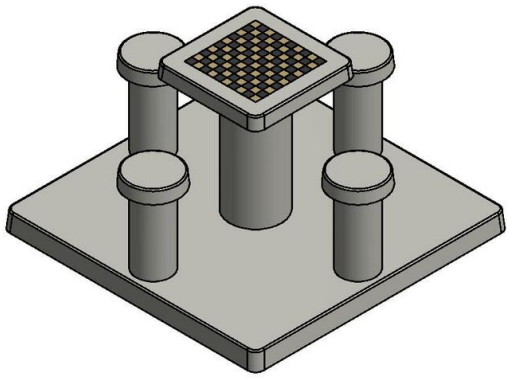

HeBlad
www.HeBlad.com
GT.CK.4

± 900 KG.

Specifications Checkers/Drafts Table Natural Concrete (4P)

Product code	GT.CK.4	Height tabletop	75 cm
Colour	Natural concrete	Seat height	50 cm
Dimensions (L x W x H)	149 x 149 x 85 cm	Dimensions base plate (L x W x H)	149 x 149 x 10 cm
Dimensions tabletop (L x W)	60 x 60 cm	Weight	900 kg
Tabletop thickness	7 cm		

Related products

GT.CK.AB4

GT.CH.2

BB.CK

GT.CK.Pieces

PS.DLAB.GT.132

Our products are delivered from our factory in the Netherlands.

correspondence address

HeBlad - UK
The Balance, 7th floor, Pinfold Street
S1 2GU Sheffield, South Yorkshire
T. 0114 352 0110
info@HeBlad.co.uk
www.HeBlad.co.uk

head office address

Checkers/Drafts Bench, Anthracite-Concrete

Product code: BB.CK.AB

£ 2,325.00 excl. VAT
(£ 2,790.00 incl. VAT)

A show-piece at squares, in parks, or in the middle of a city centre. A bench and a table with a tabletop for a checkers/drafts game . To play a game of fun or just sit back and relax.
Because of its weight and design, it is extremely suitable to use as ram raid protection. Made in Anthracite-Concrete.

* When ordering one draughts Bench you will receive 1 set of dams with it.

Our products are delivered from our factory in the Netherlands.

Registred under: HeBlad BV • HM Revenue and Customs • Ruby House 8 • Ruby Place • AB10 1ZP Aberdeen
VAT Number GB381060225 • EORI Number GB381060225000 • Commercial register (NL) 170 66 364
Rabobank De Kempen, Markt 7, 5531 BA Bladel (NL) • BIC RABONL2U • Branch code RABONL2UXXX • IBAN NL 20 RABO 0107530112 GBP

correspondence address

HeBlad - UK
The Balance, 7th floor, Pinfold Street
S1 2GU Sheffield, South Yorkshire
T. 0114 352 0110
info@HeBlad.co.uk
www.HeBlad.co.uk

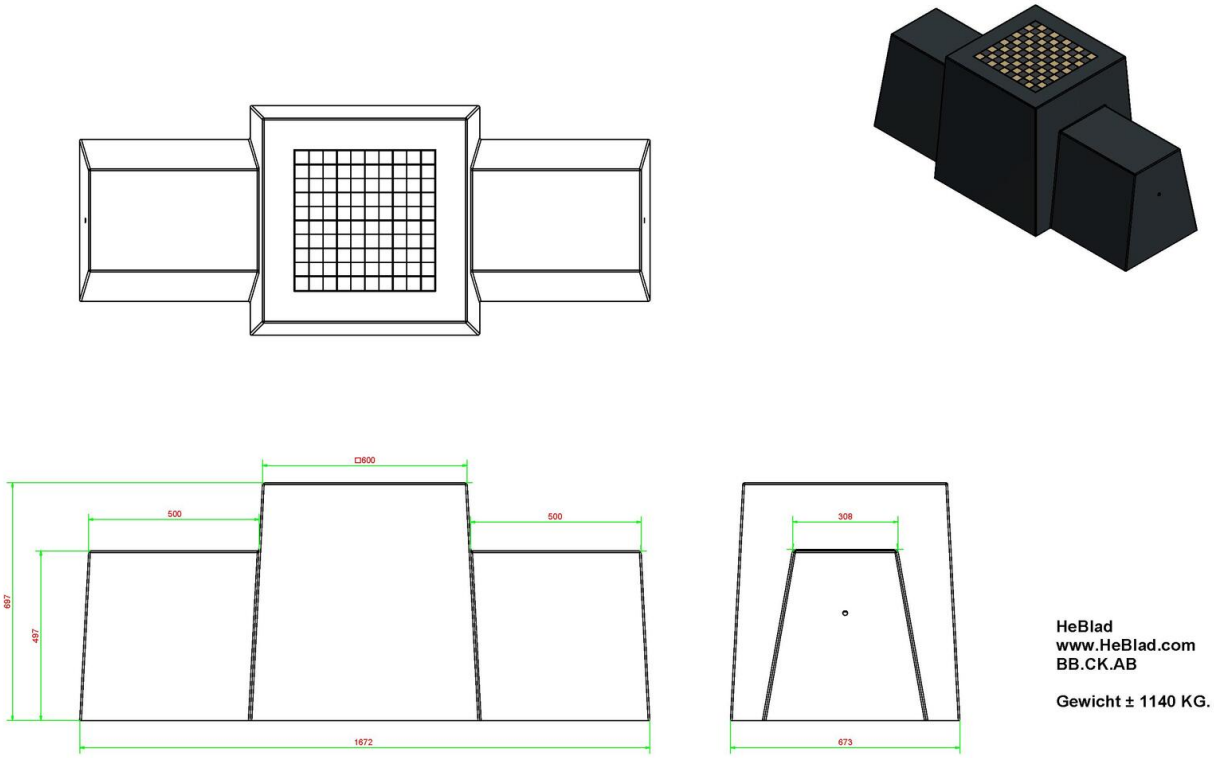

Specifications Checkers/Drafts Bench, Anthracite-Concrete

Product code	BB.CK.AB	Height tabletop	70 cm
Colour	Anthracite concrete	Weight	1140 kg
Dimensions (L x W x H)	167 x 67 x 70 cm	Number of seats	2
Seat height	50 cm		

Related products

BB.CK

BB.CH

GT.CK.AB2

GT.CK.Pieces

GT.CK.AB4

Our products are delivered from our factory in the Netherlands.

correspondence address

HeBlad - UK
The Balance, 7th floor, Pinfold Street
S1 2GU Sheffield, South Yorkshire
T. 0114 352 0110
info@HeBlad.co.uk
www.HeBlad.co.uk

head office address

Checkers/Drafts Table Anthracite-Concrete (2P)

Product code: GT.CK.AB2

£ 3,075.00 excl. VAT
(£ 3,690.00 incl. VAT)

This concrete set consists of a bottom plate with a draughts table and two seats. Very elegant looking table to play on, suitable for any place where Young and Old are looking for entertainment and fun.
The 100 fields (50 white and 50 black) are made of marble and hard granite rock, natural stones, which are integrated into the concrete by us.

The bottom plate measures 59 x 149 cm. By removing 2 x 5 paving stones from the schoolyard a space of 60 x 150 cm is created. We want to place the table in this “gap” so that the bottom plate is fully integrated into the schoolyards pavement.

In case, you want to place the table in a park, the plate can be levelled with the grass so that the upper side of the concrete plate matches the cutting height.

Placing is included in the price. Preliminary work must be finished before delivery. Like all other tables and benches of HeBlad, this table is moulded entirely in one piece of high quality concrete.

This concrete Draughts Table is made of anthracite-coloured concrete. The anthracite “concrete-look” is a decorative sight

Our products are delivered from our factory in the Netherlands.

Registred under: HeBlad BV • HM Revenue and Customs • Ruby House 8 • Ruby Place • AB10 1ZP Aberdeen
VAT Number GB381060225 • EORI Number GB381060225000 • Commercial register (NL) 170 66 364
Rabobank De Kempen, Markt 7, 5531 BA Bladel (NL) • BIC RABONL2U • Branch code RABONL2UXXX • IBAN NL 20 RABO 0107530112 GBP

correspondence address

HeBlad - UK
The Balance, 7th floor, Pinfold Street
S1 2GU Sheffield, South Yorkshire
T. 0114 352 0110
info@HeBlad.co.uk
www.HeBlad.co.uk

head office address

HeBlad BV
Diamantweg 22
NL - 5527 LC Hapert

The table is weatherproof.

Our products are delivered from our factory in the Netherlands.

correspondence address

HeBlad - UK
The Balance, 7th floor, Pinfold Street
S1 2GU Sheffield, South Yorkshire
T. 0114 352 0110
info@HeBlad.co.uk
www.HeBlad.co.uk

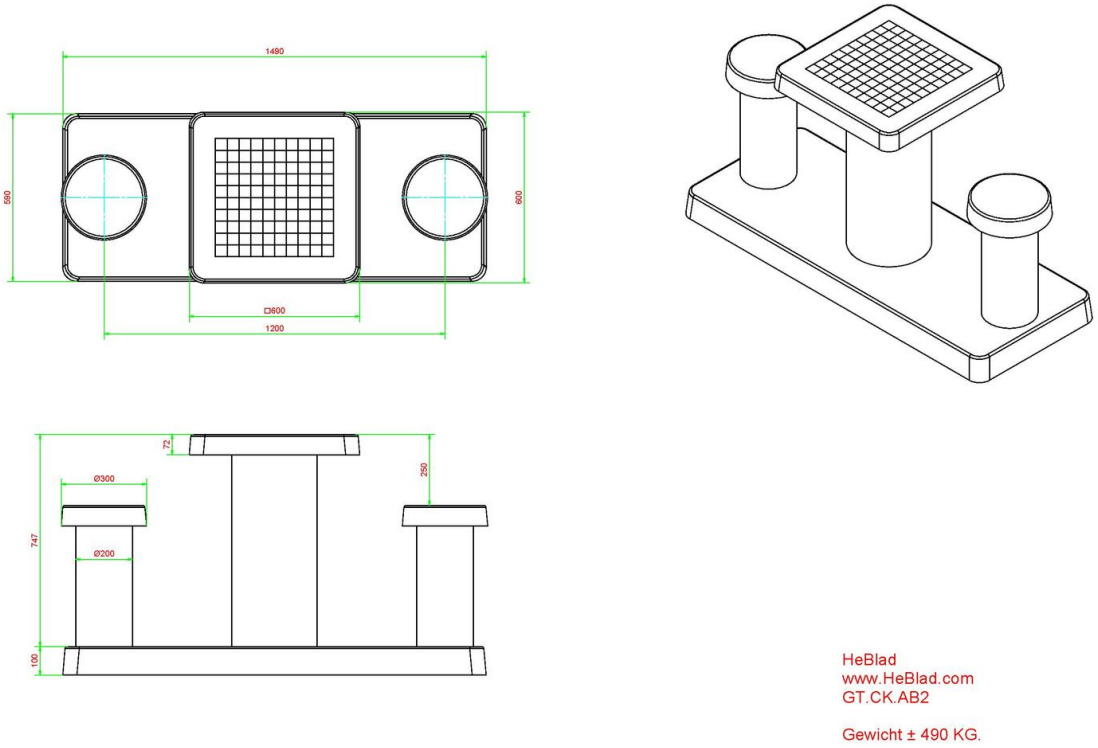

Specifications Checkers/Drafts Table Anthracite-Concrete (2P)

Product code	GT.CK.AB2	Height tabletop	75 cm
Colour	Anthracite concrete	Seat height	50 cm
Dimensions (L x W x H)	149 x 59 x 85 cm	Dimensions base plate (L x W x H)	120 x 60 x 10 cm
Dimensions tabletop (L x W)	60 x 60 cm	Weight	425 kg
Tabletop thickness	7 cm		

Related products

GT.CK.2

GT.CH.AB4

BB.CK

GT.CK.Pieces

PS.DL.GT.132

Our products are delivered from our factory in the Netherlands.

correspondence address

HeBlad - UK
The Balance, 7th floor, Pinfold Street
S1 2GU Sheffield, South Yorkshire
T. 0114 352 0110
info@HeBlad.co.uk
www.HeBlad.co.uk

head office address

Checkers/Drafts Table Anthracite-Concrete (4P)

Product code: GT.CK.AB4

£ 3,275.00 excl. VAT
(£ 3,930.00 incl. VAT)

This concrete set consists of a bottom plate with a draughts table and four seats. Very elegant looking table to play on, suitable for any place where Young and Old are looking for entertainment and fun.
The 100 fields (50 white and 50 black) are made of marble and hard granite rock, natural stones, which are integrated into the concrete by us.

The bottom plate measures 59 x 149 cm. By removing 2 x 5 paving stones from the schoolyard a space of 60 x 150 cm is created. We want to place the table in this “gap” so that the bottom plate is fully integrated into the schoolyards pavement.

In case, you want to place the table in a park, the plate can be levelled with the grass so that the upper side of the concrete plate matches the cutting height.

Placing is included in the price. Preliminary work must be finished before delivery. Like all other tables and benches of HeBlad, this table is moulded entirely in one piece of high quality concrete.

This concrete Draughts Table is made of anthracite-coloured concrete. The anthracite “concrete-look” is a decorative sight

Our products are delivered from our factory in the Netherlands.

Registred under: HeBlad BV • HM Revenue and Customs • Ruby House 8 • Ruby Place • AB10 1ZP Aberdeen
VAT Number GB381060225 • EORI Number GB381060225000 • Commercial register (NL) 170 66 364
Rabobank De Kempen, Markt 7, 5531 BA Bladel (NL) • BIC RABONL2U • Branch code RABONL2UXXX • IBAN NL 20 RABO 0107530112 GBP

correspondence address

HeBlad - UK
The Balance, 7th floor, Pinfold Street
S1 2GU Sheffield, South Yorkshire
T. 0114 352 0110
info@HeBlad.co.uk
www.HeBlad.co.uk

head office address

HeBlad BV
Diamantweg 22
NL - 5527 LC Hapert

The table is weatherproof.

Our products are delivered from our factory in the Netherlands.

correspondence address

HeBlad - UK
The Balance, 7th floor, Pinfold Street
S1 2GU Sheffield, South Yorkshire
T. 0114 352 0110
info@HeBlad.co.uk
www.HeBlad.co.uk

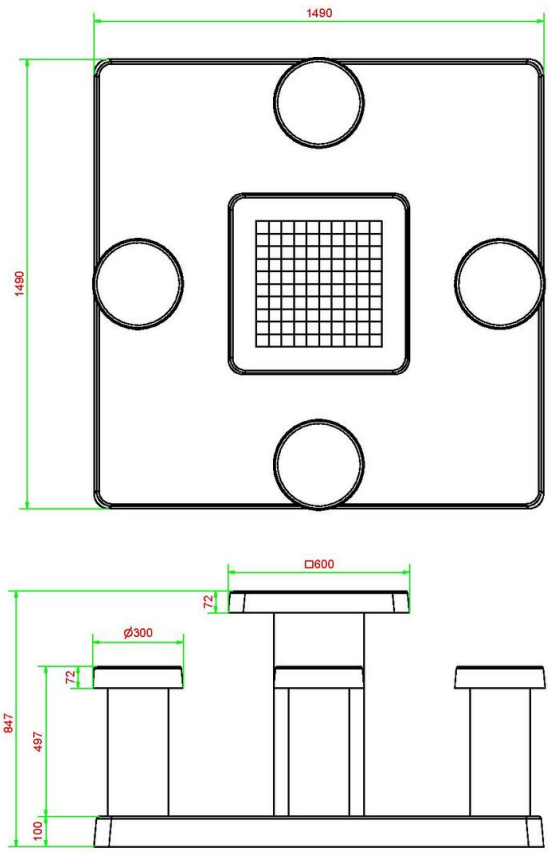

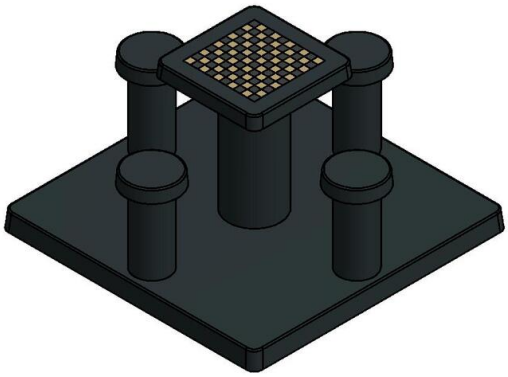

HeBlad
www.HeBlad.com
GT.CK.AB4

± 900 KG.

Specifications Checkers/Drafts Table Anthracite-Concrete (4P)

Product code	GT.CK.AB4	Height tabletop	75 cm
Colour	Anthracite concrete	Seat height	50 cm
Dimensions (L x W x H)	149 x 149 x 85 cm	Dimensions base plate (L x W x H)	149 x 149 x 10 cm
Dimensions tabletop (L x W)	60 x 60 cm	Weight	900 kg
Tabletop thickness	7 cm		

Related products

GT.CK.4

GT.CH.AB2

BB.CK.AB

GT.CK.Pieces

PS.DL.GT.132

Our products are delivered from our factory in the Netherlands.

correspondence address

HeBlad - UK
The Balance, 7th floor, Pinfold Street
S1 2GU Sheffield, South Yorkshire
T. 0114 352 0110
info@HeBlad.co.uk
www.HeBlad.co.uk

head office address

Ludo Game Table Naturel Concrete (4P)

Product code: GT.LD.4

£ 3,325.00 excl. VAT
(£ 3,990.00 incl. VAT)

A showpiece for example on school squares or in the playgrounds. Children can alternate play a game of Ludo or just being able to have lunch at the table. The Game Table consists of a solid piece of concrete, so no loose parts, which will be a benefit to safety. The game surfaces are of natural stone. The table is resistant to all weather influences. A HeBlad Game Table guarantees years of fun.
This Game Table is also available in a Chess Table or just a blank Game Table, both with or 4 seats.

* When ordering this Game Table you will receive 1 set of pawns and a dice free of charge.

Our products are delivered from our factory in the Netherlands.

Registred under: HeBlad BV • HM Revenue and Customs • Ruby House 8 • Ruby Place • AB10 1ZP Aberdeen
VAT Number GB381060225 • EORI Number GB381060225000 • Commercial register (NL) 170 66 364
Rabobank De Kempen, Markt 7, 5531 BA Bladel (NL) • BIC RABONL2U • Branch code RABONL2UXXX • IBAN NL 20 RABO 0107530112 GBP

correspondence address

HeBlad - UK
The Balance, 7th floor, Pinfold Street
S1 2GU Sheffield, South Yorkshire
T. 0114 352 0110
info@HeBlad.co.uk
www.HeBlad.co.uk

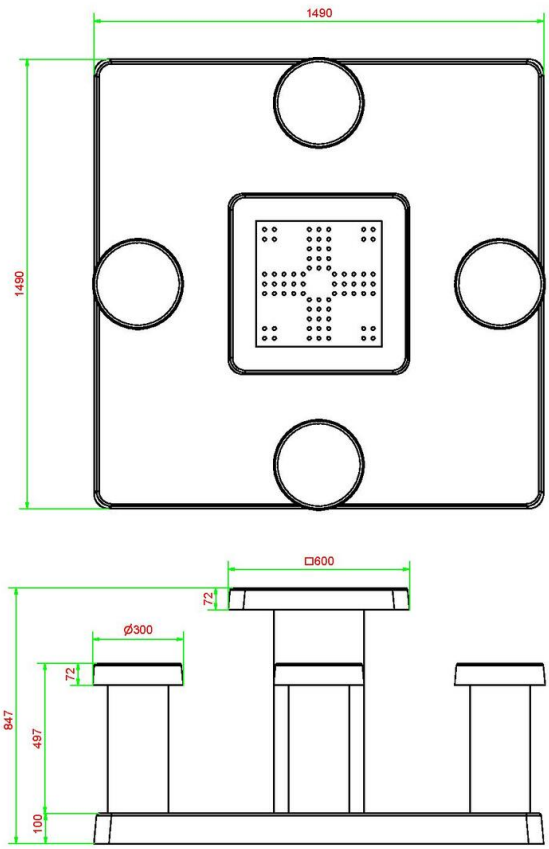

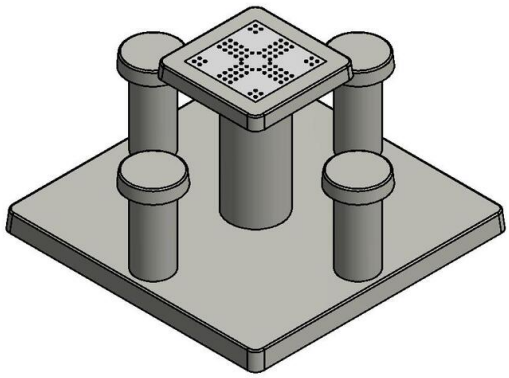

HeBlad
www.HeBlad.com
GT.LD.4

± 900 KG.

Specifications Ludo Game Table Naturel Concrete (4P)

Product code	GT.LD.4	Height tabletop	75 cm
Colour	Natural concrete	Seat height	50 cm
Dimensions (L x W x H)	149 x 149 x 85 cm	Dimensions base plate (L x W x H)	149 x 149 x 10 cm
Dimensions tabletop (L x W)	60 x 60 cm	Weight	900 kg
Tabletop thickness	7 cm		

Related products

GT.CH.AB4

GT.CK.2

BB.CH.AB

Our products are delivered from our factory in the Netherlands.

correspondence address

HeBlad - UK
The Balance, 7th floor, Pinfold Street
S1 2GU Sheffield, South Yorkshire
T. 0114 352 0110
info@HeBlad.co.uk
www.HeBlad.co.uk

head office address

Ludo Game Table Anthracite-Concrete (4P)

Product code: GT.LD.AB4

£ 3,425.00 excl. VAT
(£ 4,110.00 incl. VAT)

This is an ideal Game Table for a primary school or a playground. The design makes it an eye catcher. This Ludo Game Table is molded in one piece of concrete, no loose parts, so it is safe. The game surfaces are of natural stone, processed by us in concrete. A game can be played on it, but it is also suitable as a table for a bite to eat. Because the underplate is placed at the same level as the existing pavement, it is also easy to keep the area neat around the Game Table. This Game Table is available in various versions, see also Chess Table, Checkers Table or just a table to play on. You can choose the Anthracite-Concrete or Natural Concrete version.

* When ordering this Game Table you will get 1 set of pawns and a dice free of charge.

Our products are delivered from our factory in the Netherlands.

Registred under: HeBlad BV • HM Revenue and Customs • Ruby House 8 • Ruby Place • AB10 1ZP Aberdeen
VAT Number GB381060225 • EORI Number GB381060225000 • Commercial register (NL) 170 66 364
Rabobank De Kempen, Markt 7, 5531 BA Bladel (NL) • BIC RABONL2U • Branch code RABONL2UXXX • IBAN NL 20 RABO 0107530112 GBP

correspondence address

HeBlad - UK
The Balance, 7th floor, Pinfold Street
S1 2GU Sheffield, South Yorkshire
T. 0114 352 0110
info@HeBlad.co.uk
www.HeBlad.co.uk

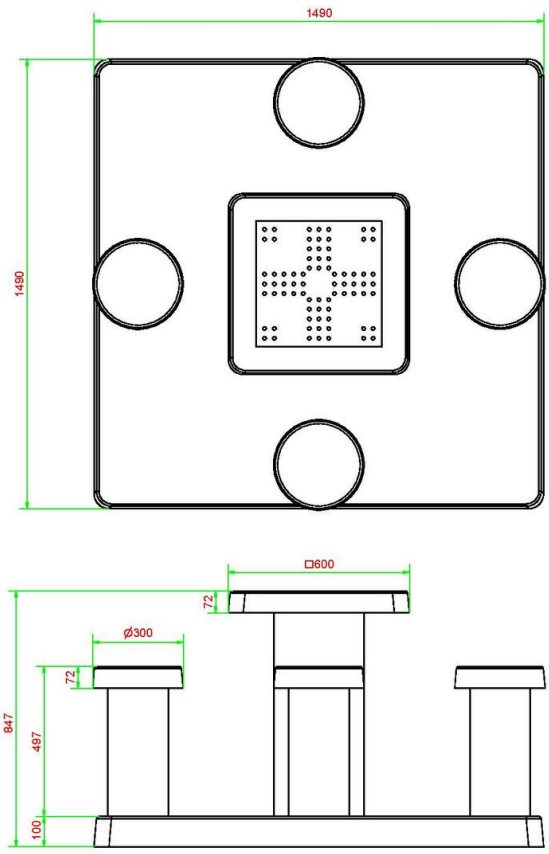

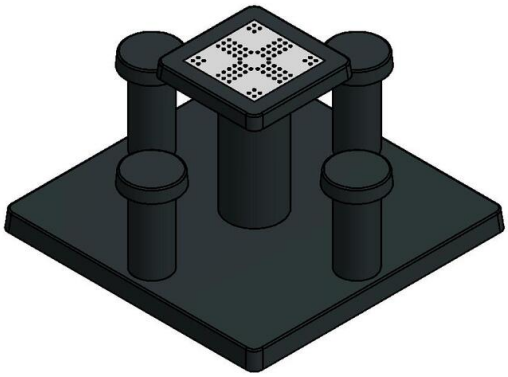

HeBlad
www.HeBlad.com
GT.LD.AB4

± 900 KG.

Specifications Ludo Game Table Anthracite-Concrete (4P)

Product code	GT.LD.AB4	Height tabletop	75 cm
Colour	Anthracite concrete	Seat height	50 cm
Dimensions (L x W x H)	149 x 149 x 85 cm	Dimensions base plate (L x W x H)	149 x 149 x 10 cm
Dimensions tabletop (L x W)	60 x 60 cm	Weight	900 kg
Tabletop thickness	7 cm		

Related products

BB.CH

GT.CK.AB2

GT.CH.4

Our products are delivered from our factory in the Netherlands.

correspondence address

HeBlad - UK
The Balance, 7th floor, Pinfold Street
S1 2GU Sheffield, South Yorkshire
T. 0114 352 0110
info@HeBlad.co.uk
www.HeBlad.co.uk

head office address

Multi Gaming table (1-3-2) Standard

Product code: PS.ST.GT.132

£ 3,800.00 excl. VAT
(£ 4,560.00 incl. VAT)

Soon more information about this product

Our products are delivered from our factory in the Netherlands.

12 October 2024 - Prices subject to change

correspondence address

HeBlad - UK
The Balance, 7th floor, Pinfold Street
S1 2GU Sheffield, South Yorkshire
T. 0114 352 0110
info@HeBlad.co.uk
www.HeBlad.co.uk

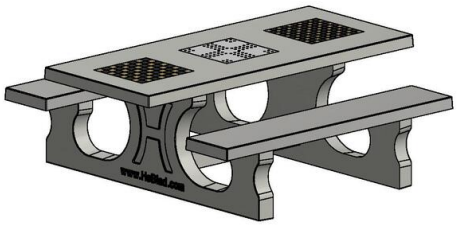

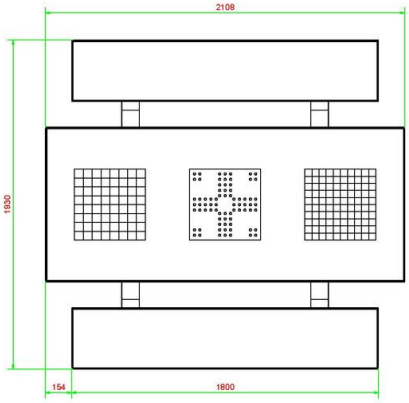

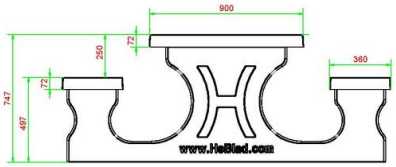

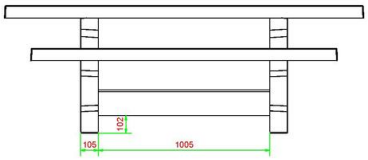

HeBlad
www.HeBlad.com
PS.ST.GT.132

± 950 KG.

Specifications Multi Gaming table (1-3-2) Standard

Product code	PS.ST.GT.132	Height tabletop	75 cm
Colour	Natural concrete	Seat height	50 cm
Dimensions (L x W x H)	210 x 193 x 75 cm	Material seat	Beton
Dimensions tabletop (L x W)	210 x 90 cm	Distance legs	111 cm (center to center)
Tabletop thickness	7 cm	Weight	950 kg

Our products are delivered from our factory in the Netherlands.

correspondence address

HeBlad - UK
The Balance, 7th floor, Pinfold Street
S1 2GU Sheffield, South Yorkshire
T. 0114 352 0110
info@HeBlad.co.uk
www.HeBlad.co.uk

head office address

Multi Gaming table (1-3-4) Standard

Product code: PS.ST.GT.134

£ 3,950.00 excl. VAT
(£ 4,740.00 incl. VAT)

Our products are delivered from our factory in the Netherlands.

12 October 2024 - Prices subject to change

correspondence address

HeBlad - UK
The Balance, 7th floor, Pinfold Street
S1 2GU Sheffield, South Yorkshire
T. 0114 352 0110
info@HeBlad.co.uk
www.HeBlad.co.uk

head office address

HeBlad BV
Diamantweg 22
NL - 5527 LC Hapert

Specifications Multi Gaming table (1-3-4) Standard

Product code	PS.ST.GT.134	Height tabletop	75 cm
Colour	Natural concrete	Seat height	50 cm
Dimensions (L x W x H)	210 x 193 x 75 cm	Material seat	Beton
Dimensions tabletop (L x W)	210 x 90 cm	Distance legs	111 cm (center to center)
Tabletop thickness	7 cm	Weight	950 kg

Our products are delivered from our factory in the Netherlands.

correspondence address

HeBlad - UK
The Balance, 7th floor, Pinfold Street
S1 2GU Sheffield, South Yorkshire
T. 0114 352 0110
info@HeBlad.co.uk
www.HeBlad.co.uk

head office address

Set of chessmen

Product code: GT.CH.Pieces

£ 19.00 excl. VAT
(£ 22.80 incl. VAT)

Set of chess pieces. This set of 2 x 16 pieces is made of wood in the colours of white and brown.
This pieces will be delivered without charge with an order of HeBlad concrete chess table.

Delivery of this product requires shipping costs.

The height of the king is 3.5 inches.
The bottom is fixed with felt.

Our products are delivered from our factory in the Netherlands.

Registred under: HeBlad BV • HM Revenue and Customs • Ruby House 8 • Ruby Place • AB10 1ZP Aberdeen
VAT Number GB381060225 • EORI Number GB381060225000 • Commercial register (NL) 170 66 364
Rabobank De Kempen, Markt 7, 5531 BA Bladel (NL) • BIC RABONL2U • Branch code RABONL2UXXX • IBAN NL 20 RABO 0107530112 GBP

correspondence address

HeBlad - UK
The Balance, 7th floor, Pinfold Street
S1 2GU Sheffield, South Yorkshire
T. 0114 352 0110
info@HeBlad.co.uk
www.HeBlad.co.uk

head office address

HeBlad BV
Diamantweg 22
NL - 5527 LC Hapert

Specifications Set of chessmen

Product code	GT.CH.Pieces
Material	Hout
King height	7,7 cm

Related products

GT.CH.G4

HB.FB.A

BB.CH

GT.CH.AB2

Our products are delivered from our factory in the Netherlands.

correspondence address

HeBlad - UK
The Balance, 7th floor, Pinfold Street
S1 2GU Sheffield, South Yorkshire
T. 0114 352 0110
info@HeBlad.co.uk
www.HeBlad.co.uk

head office address

Multi Gaming table (1-3-2) Standard Anthracite-Concrete

Product code: PS.STAB.GT.132
Soon more information about this product

£ 3,950.00 excl. VAT
(£ 4,740.00 incl. VAT)

Our products are delivered from our factory in the Netherlands.

12 October 2024 - Prices subject to change

correspondence address

HeBlad - UK
The Balance, 7th floor, Pinfold Street
S1 2GU Sheffield, South Yorkshire
T. 0114 352 0110
info@HeBlad.co.uk
www.HeBlad.co.uk

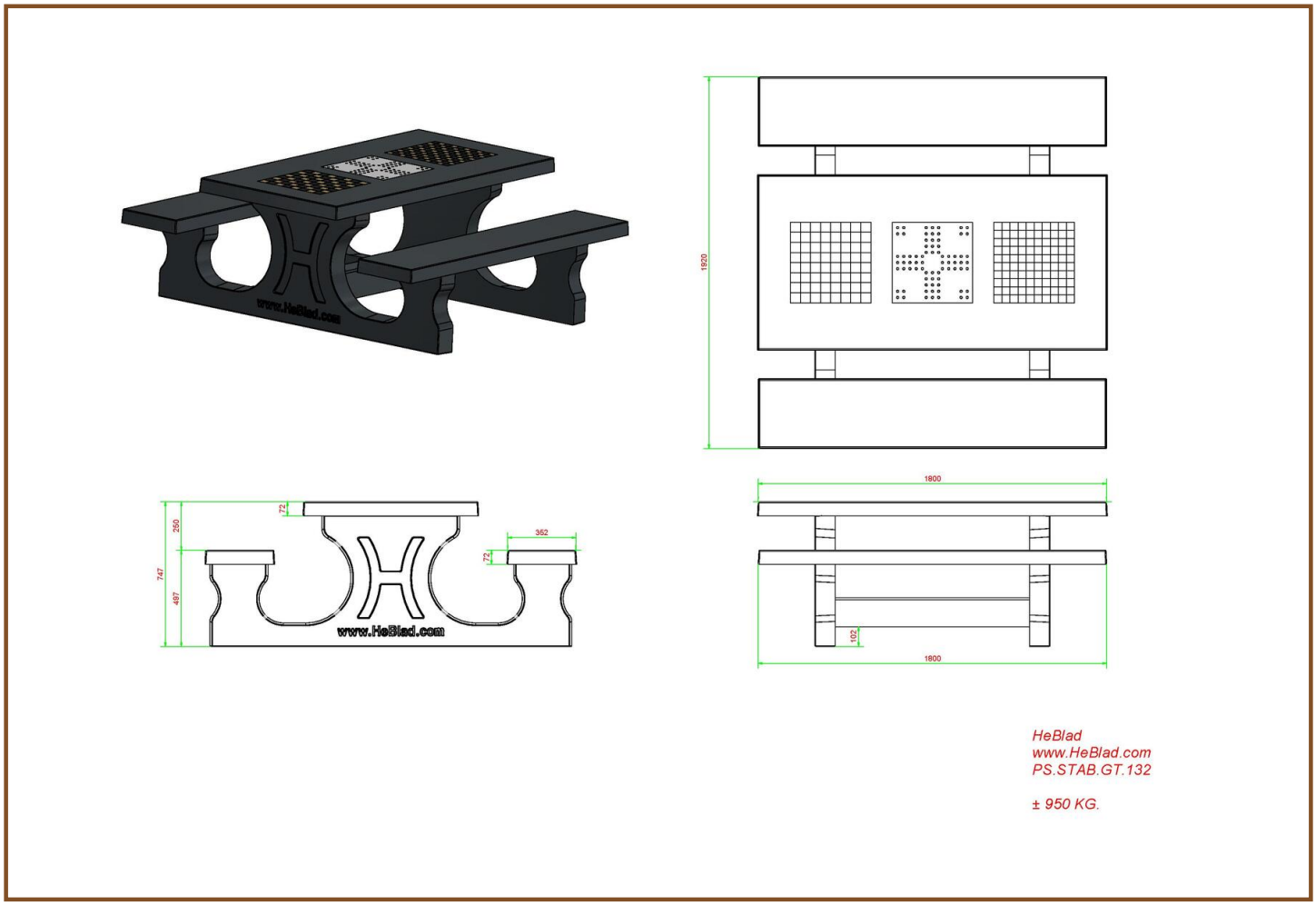

Specifications Multi Gaming table (1-3-2) Standard Anthracite-Concrete

Product code	PS.STAB.GT.132	Tabletop thickness	7 cm
Colour	Anthracite concrete	Seat height	50 cm
Dimensions (L x W x H)	210 x 193 x 75 cm	Weight	950 kg
Dimensions tabletop (L x W)	210 x 90 cm	Material seat	Beton
Height tabletop	75 cm	Distance legs	111 cm (center to center)

Our products are delivered from our factory in the Netherlands.

correspondence address

HeBlad - UK
The Balance, 7th floor, Pinfold Street
S1 2GU Sheffield, South Yorkshire
T. 0114 352 0110
info@HeBlad.co.uk
www.HeBlad.co.uk

head office address

Multi Gaming table (1-3-4) Standard Anthracite-concrete

Product code: PS.STAB.GT.134

£ 4,100.00 excl. VAT
(£ 4,920.00 incl. VAT)

Our products are delivered from our factory in the Netherlands.

12 October 2024 - Prices subject to change

correspondence address

HeBlad - UK
The Balance, 7th floor, Pinfold Street
S1 2GU Sheffield, South Yorkshire
T. 0114 352 0110
info@HeBlad.co.uk
www.HeBlad.co.uk

head office address

HeBlad BV
Diamantweg 22
NL - 5527 LC Hapert

Specifications Multi Gaming table (1-3-4) Standard Anthracite-concrete

Product code	PS.STAB.GT.134	Height tabletop	75 cm
Colour	Anthracite concrete	Seat height	50 cm
Dimensions (L x W x H)	210 x 193 x 75 cm	Material seat	Beton
Dimensions tabletop (L x W)	210 x 90 cm	Distance legs	111 cm (center to center)
Tabletop thickness	7 cm	Weight	950 kg

Our products are delivered from our factory in the Netherlands.

correspondence address

HeBlad - UK
The Balance, 7th floor, Pinfold Street
S1 2GU Sheffield, South Yorkshire
T. 0114 352 0110
info@HeBlad.co.uk
www.HeBlad.co.uk

head office address

Set of checkers/drafts

Product code: GT.CK.Pieces

£ 12.00 excl. VAT
(£ 14.40 incl. VAT)

Our products are delivered from our factory in the Netherlands.

13 October 2024 - Prices subject to change

correspondence address

HeBlad - UK
The Balance, 7th floor, Pinfold Street
S1 2GU Sheffield, South Yorkshire
T. 0114 352 0110
info@HeBlad.co.uk
www.HeBlad.co.uk

head office address

HeBlad BV
Diamantweg 22
NL - 5527 LC Hapert

Specifications Set of checkers/drafts

Product code	GT.CK.Pieces
Material	Hout

Related products

GT.CK.AB2

GT.CK.AB4

HB.FB.A

BB.CK

Our products are delivered from our factory in the Netherlands.

correspondence address

HeBlad - UK
The Balance, 7th floor, Pinfold Street
S1 2GU Sheffield, South Yorkshire
T. 0114 352 0110
info@HeBlad.co.uk
www.HeBlad.co.uk

head office address

Multi Gaming table (1-3-2) DeLuxe

Product code: PS.DL.GT.132

£ 3,950.00 excl. VAT
(£ 4,740.00 incl. VAT)

Our products are delivered from our factory in the Netherlands.

12 October 2024 - Prices subject to change

correspondence address

HeBlad - UK
The Balance, 7th floor, Pinfold Street
S1 2GU Sheffield, South Yorkshire
T. 0114 352 0110
info@HeBlad.co.uk
www.HeBlad.co.uk

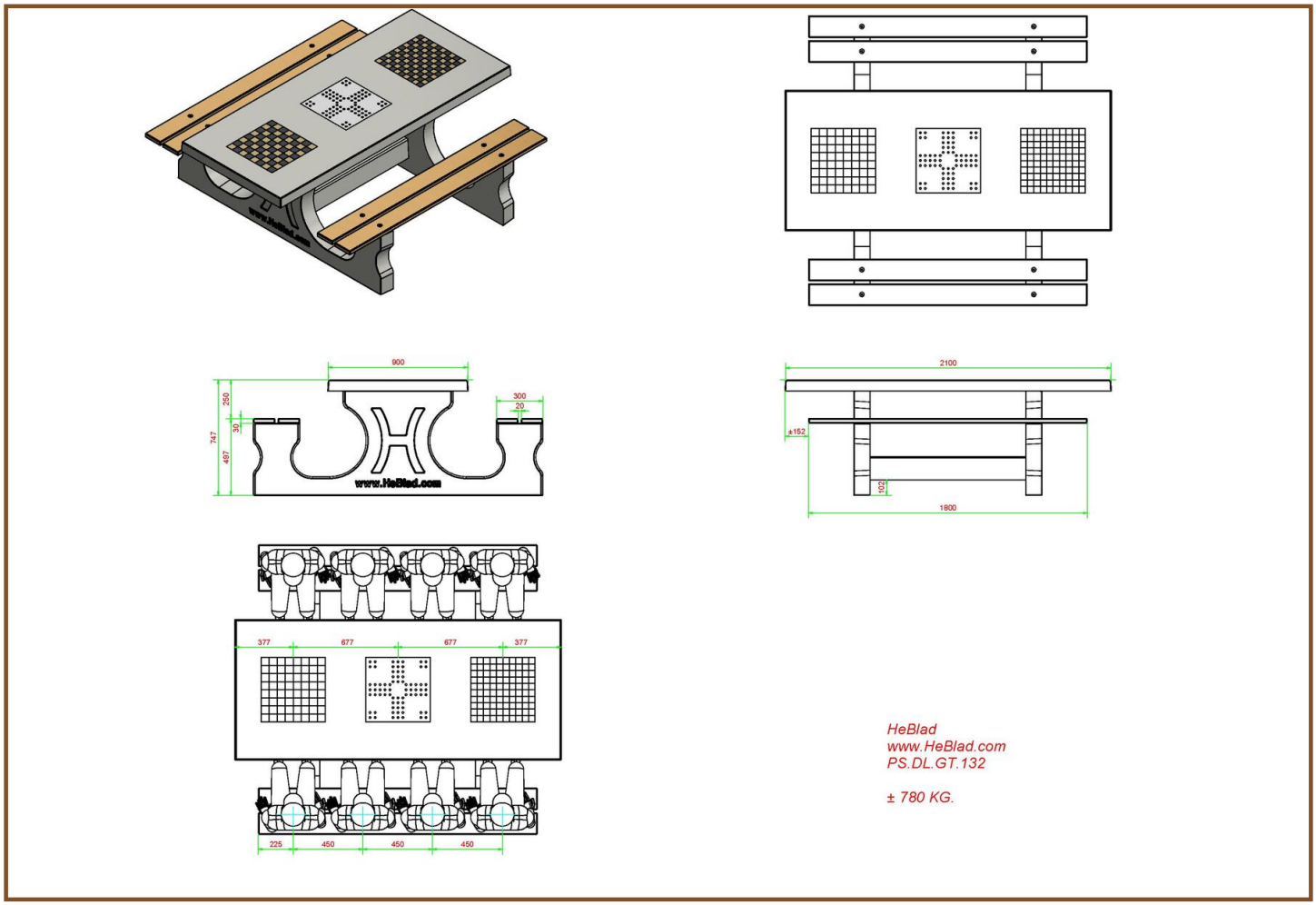

Specifications Multi Gaming table (1-3-2) DeLuxe

Product code	PS.DL.GT.132	Height tabletop	75 cm
Colour	Natural concrete	Seat height	50 cm
Dimensions (L x W x H)	210 x 193 x 75 cm	Material seat	Bamboo
Dimensions tabletop (L x W)	210 x 90 cm	Distance legs	111 cm (center to center)
Tabletop thickness	7 cm	Weight	780 kg

Related products

PS.DLAB.GT.132

GT.CH.Pieces

GT.CK.2

Our products are delivered from our factory in the Netherlands.

correspondence address

HeBlad - UK
The Balance, 7th floor, Pinfold Street
S1 2GU Sheffield, South Yorkshire
T. 0114 352 0110
info@HeBlad.co.uk
www.HeBlad.co.uk

head office address

Multi Gaming table (1-3-4) DeLuxe

Product code: PS.DL.GT.134

£ 4,100.00 excl. VAT
(£ 4,920.00 incl. VAT)

Our products are delivered from our factory in the Netherlands.

12 October 2024 - Prices subject to change

correspondence address

HeBlad - UK
The Balance, 7th floor, Pinfold Street
S1 2GU Sheffield, South Yorkshire
T. 0114 352 0110
info@HeBlad.co.uk
www.HeBlad.co.uk

head office address

HeBlad BV
Diamantweg 22
NL - 5527 LC Hapert

Specifications Multi Gaming table (1-3-4) DeLuxe

Product code	PS.DL.GT.134	Height tabletop	75 cm
Colour	Natural concrete	Seat height	50 cm
Dimensions (L x W x H)	210 x 193 x 75 cm	Material seat	Bamboo
Dimensions tabletop (L x W)	210 x 90 cm	Distance legs	111 cm (center to center)
Tabletop thickness	7 cm	Weight	780 kg

Our products are delivered from our factory in the Netherlands.

correspondence address

HeBlad - UK
The Balance, 7th floor, Pinfold Street
S1 2GU Sheffield, South Yorkshire
T. 0114 352 0110
info@HeBlad.co.uk
www.HeBlad.co.uk

head office address

Backgammon stones and dice

Product code: GT.BG.pieces

£ 12.00 excl. VAT
(£ 14.40 incl. VAT)

Our products are delivered from our factory in the Netherlands.

Registred under: HeBlad BV • HM Revenue and Customs • Ruby House 8 • Ruby Place • AB10 1ZP Aberdeen
VAT Number GB381060225 • EORI Number GB381060225000 • Commercial register (NL) 170 66 364
Rabobank De Kempen, Markt 7, 5531 BA Bladel (NL) • BIC RABONL2U • Branch code RABONL2UXXX • IBAN NL 20 RABO 0107530112 GBP

correspondence address

HeBlad - UK
The Balance, 7th floor, Pinfold Street
S1 2GU Sheffield, South Yorkshire
T. 0114 352 0110
info@HeBlad.co.uk
www.HeBlad.co.uk

head office address

HeBlad BV
Diamantweg 22
NL - 5527 LC Hapert

Specifications Backgammon stones and dice

Product code	GT.BG.pieces
Material	Kunststof

Our products are delivered from our factory in the Netherlands.

correspondence address

HeBlad - UK
The Balance, 7th floor, Pinfold Street
S1 2GU Sheffield, South Yorkshire
T. 0114 352 0110
info@HeBlad.co.uk
www.HeBlad.co.uk

head office address

Multi Gaming table (1-3-2) DeLuxe Anthracite-Concrete

Product code: PS.DLAB.GT.132

£ 4,100.00 excl. VAT
(£ 4,920.00 incl. VAT)

Our products are delivered from our factory in the Netherlands.

12 October 2024 - Prices subject to change

correspondence address

HeBlad - UK
The Balance, 7th floor, Pinfold Street
S1 2GU Sheffield, South Yorkshire
T. 0114 352 0110
info@HeBlad.co.uk
www.HeBlad.co.uk

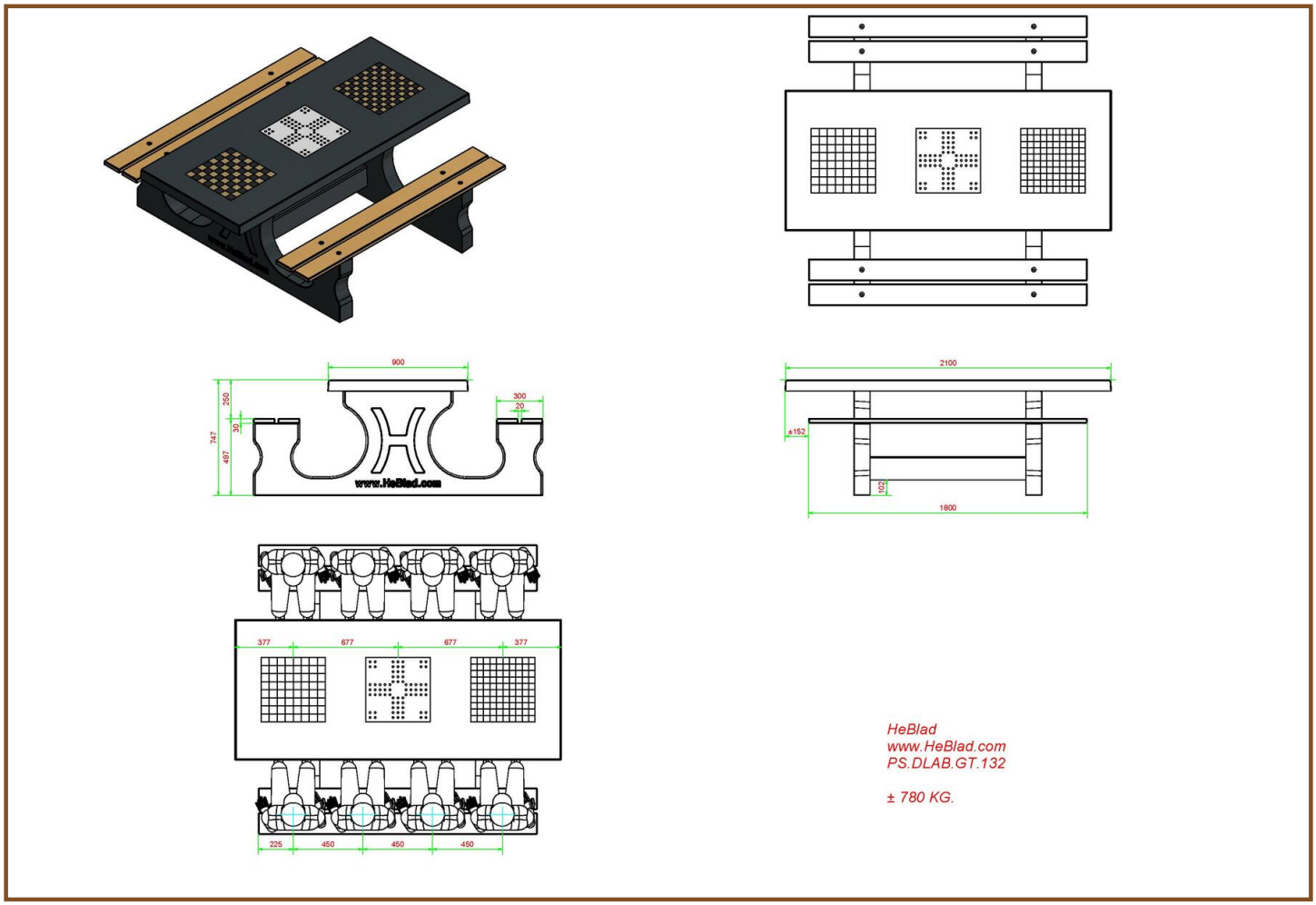

Specifications Multi Gaming table (1-3-2) DeLuxe Anthracite-Concrete

Product code	PS.DLAB.GT.132	Height tabletop	75 cm
Colour	Anthracite concrete	Seat height	50 cm
Dimensions (L x W x H)	210 x 193 x 75 cm	Material seat	Bamboo
Dimensions tabletop (L x W)	210 x 90 cm	Distance legs	111 cm (center to center)
Tabletop thickness	7 cm	Weight	780 kg

Related products

PS.DL.GT.132

BB.CH.AB

GT.CK.Pieces

GT.CK.2

Our products are delivered from our factory in the Netherlands.

correspondence address

HeBlad - UK
The Balance, 7th floor, Pinfold Street
S1 2GU Sheffield, South Yorkshire
T. 0114 352 0110
info@HeBlad.co.uk
www.HeBlad.co.uk

head office address

Multi Gaming table (1-3-4) DeLuxe Anthracite-Concrete

Product code: PS.DLAB.GT.134

£ 4,250.00 excl. VAT
(£ 5,100.00 incl. VAT)

Our products are delivered from our factory in the Netherlands.

12 October 2024 - Prices subject to change

correspondence address

HeBlad - UK
The Balance, 7th floor, Pinfold Street
S1 2GU Sheffield, South Yorkshire
T. 0114 352 0110
info@HeBlad.co.uk
www.HeBlad.co.uk

head office address

HeBlad BV
Diamantweg 22
NL - 5527 LC Hapert

Specifications Multi Gaming table (1-3-4) DeLuxe Anthracite-Concrete

Product code	PS.DLAB.GT.134	Height tabletop	75 cm
Colour	Anthracite concrete	Seat height	50 cm
Dimensions (L x W x H)	210 x 193 x 75 cm	Material seat	Bamboo
Dimensions tabletop (L x W)	210 x 90 cm	Distance legs	111 cm (center to center)
Tabletop thickness	7 cm	Weight	780 kg

Our products are delivered from our factory in the Netherlands.

correspondence address

HeBlad - UK
The Balance, 7th floor, Pinfold Street
S1 2GU Sheffield, South Yorkshire
T. 0114 352 0110
info@HeBlad.co.uk
www.HeBlad.co.uk

head office address

Multi Gaming table (1-1-1) DeLuxe

Product code: PS.DL.GT.111

£ 3,700.00 excl. VAT
(£ 4,440.00 incl. VAT)

Our products are delivered from our factory in the Netherlands.

12 October 2024 - Prices subject to change

correspondence address

HeBlad - UK
The Balance, 7th floor, Pinfold Street
S1 2GU Sheffield, South Yorkshire
T. 0114 352 0110
info@HeBlad.co.uk
www.HeBlad.co.uk

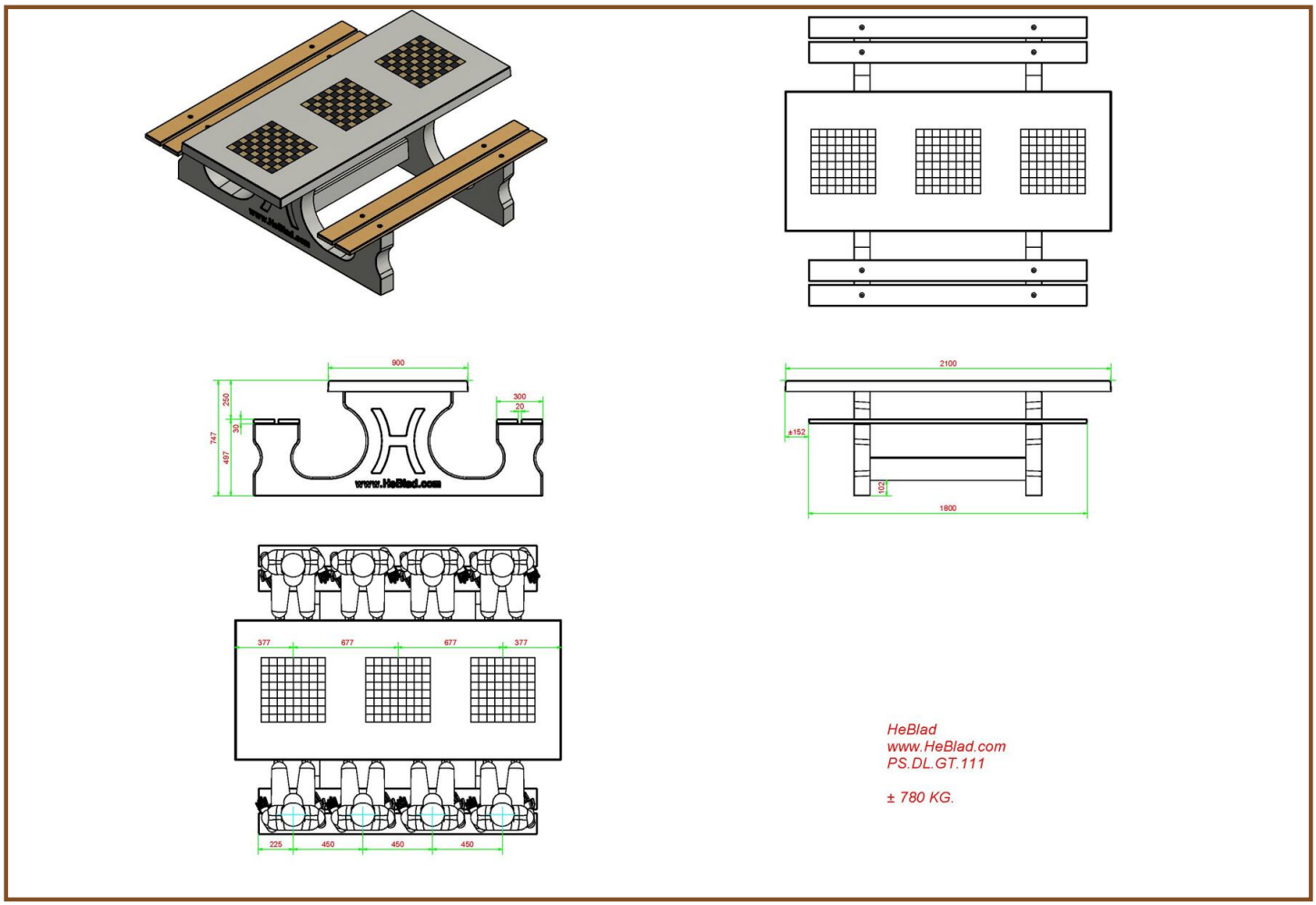

Specifications Multi Gaming table (1-1-1) DeLuxe

Product code	PS.DL.GT.111	Height tabletop	75 cm
Colour	Natural concrete	Seat height	50 cm
Dimensions (L x W x H)	210 x 193 x 75 cm	Material seat	Bamboo
Dimensions tabletop (L x W)	210 x 90 cm	Distance legs	111 cm (center to center)
Tabletop thickness	7 cm	Weight	780 kg

Our products are delivered from our factory in the Netherlands.

correspondence address

HeBlad - UK
The Balance, 7th floor, Pinfold Street
S1 2GU Sheffield, South Yorkshire
T. 0114 352 0110
info@HeBlad.co.uk
www.HeBlad.co.uk

head office address

Picnic table Standard Natural Concrete

Product code: PS.ST

£ 2,400.00 excl. VAT
(£ 2,880.00 incl. VAT)

Because of the solidity of this picnic table it is extremely suitable for places which are sensitive to vandalism. There where other tables do not function very long, with a HeBlad table you are assured of a pleasant sitting area for many years. We label our tables as vandal resistant.

All our tables are moulded in one piece and made of high quality C45/55 concrete and are reinforced with double layers of steel.

Our products are delivered from our factory in the Netherlands.

12 October 2024 - Prices subject to change

correspondence address

HeBlad - UK
The Balance, 7th floor, Pinfold Street
S1 2GU Sheffield, South Yorkshire
T. 0114 352 0110
info@HeBlad.co.uk
www.HeBlad.co.uk

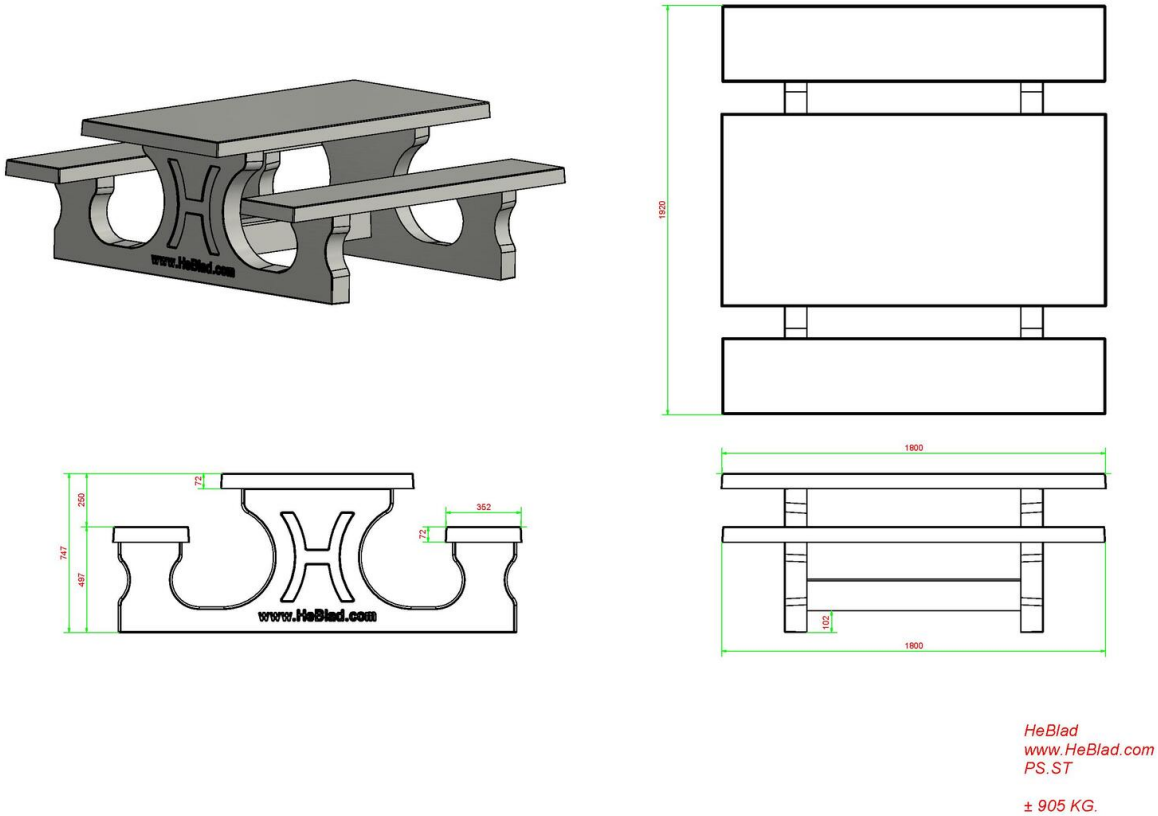

Specifications Picnic table Standard Natural Concrete

Product code	PS.ST	Seat height	50 cm
Colour	Natural concrete	Material seat	Beton
Dimensions (L x W x H)	180 x 192 x 75 cm	Distance legs	111 cm (center to center)
Dimensions tabletop (L x W)	180 x 90 cm	Weight	905 kg
Tabletop thickness	7 cm	Number of seats	8
Height tabletop	75 cm		

Related products

PS.ST.AB

PS.ST.A

PS.DL

OP.PS

PS.ST.OV

Our products are delivered from our factory in the Netherlands.

correspondence address

HeBlad - UK
The Balance, 7th floor, Pinfold Street
S1 2GU Sheffield, South Yorkshire
T. 0114 352 0110
info@HeBlad.co.uk
www.HeBlad.co.uk

head office address

Picnic table Standard Anthracite-Concrete

Product code: PS.ST.AB

£ 2,550.00 excl. VAT
(£ 3,060.00 incl. VAT)

This concrete table is equipped with concrete benches.

The entire set is made of colored concrete. This means that the anthracite color is not created by painting, but the concrete is also colored anthracite inside.
Thanks to this method of colors, the concrete look of a concrete table has been retained.

Our products are delivered from our factory in the Netherlands.

12 October 2024 - Prices subject to change

correspondence address

HeBlad - UK
The Balance, 7th floor, Pinfold Street
S1 2GU Sheffield, South Yorkshire
T. 0114 352 0110
info@HeBlad.co.uk
www.HeBlad.co.uk

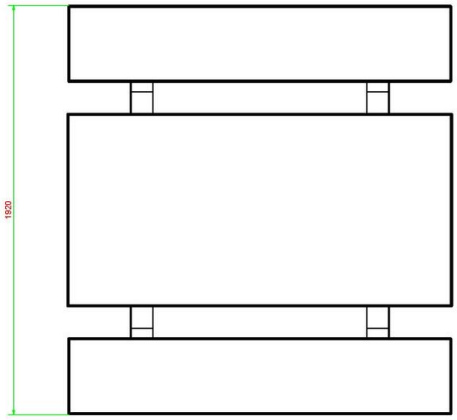

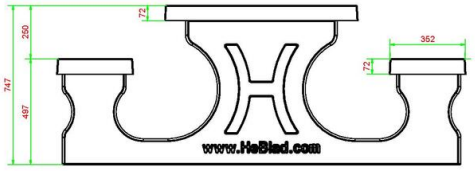

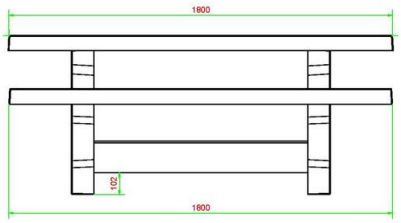

HeBlad
www.HeBlad.com
PS.ST.AB

± 905 KG.

Specifications Picnic table Standard Anthracite-Concrete

Product code	PS.ST.AB	Seat height	50 cm
Colour	Anthracite concrete	Material seat	Beton
Dimensions (L x W x H)	180 x 192 x 75 cm	Distance legs	111 cm (center to center)
Dimensions tabletop (L x W)	180 x 90 cm	Weight	905 kg
Tabletop thickness	7 cm	Number of seats	8
Height tabletop	75 cm		

Related products

PS.ST

PS.ST.A

PS.DL.AB

OP.PS.AB

PS.STAB.OV

Our products are delivered from our factory in the Netherlands.

Registred under: HeBlad BV • HM Revenue and Customs • Ruby House 8 • Ruby Place • AB10 1ZP Aberdeen
VAT Number GB381060225 • EORI Number GB381060225000 • Commercial register (NL) 170 66 364
Rabobank De Kempen, Markt 7, 5531 BA Bladel (NL) • BIC RABONL2U • Branch code RABONL2UXXX • IBAN NL 20 RABO 0107530112 GBP

correspondence address

HeBlad - UK
The Balance, 7th floor, Pinfold Street
S1 2GU Sheffield, South Yorkshire
T. 0114 352 0110
info@HeBlad.co.uk
www.HeBlad.co.uk

head office address

Concrete Picnic table Standard Anthracite

Product code: PS.ST.A

£ 2,500.00 excl. VAT
(£ 3,000.00 incl. VAT)

Here you are, this is a real concrete table! Sprayed in anthracite with matt finish. This table invites you to sit, ideal along cycling tracks or in squares or parks. Sitting down in relaxed surroundings and enjoying a snack or drink. Because this table is entirely coloured in anthracite it has a warm appearance and does not invite making a mess on it. The picnic table cannot be dismantled, because the table plate and undercarriage are moulded in one piece. We guarantee you that this table will give you pleasure for many years.

Our products are delivered from our factory in the Netherlands.

12 October 2024 - Prices subject to change

correspondence address

HeBlad - UK
The Balance, 7th floor, Pinfold Street
S1 2GU Sheffield, South Yorkshire
T. 0114 352 0110
info@HeBlad.co.uk
www.HeBlad.co.uk

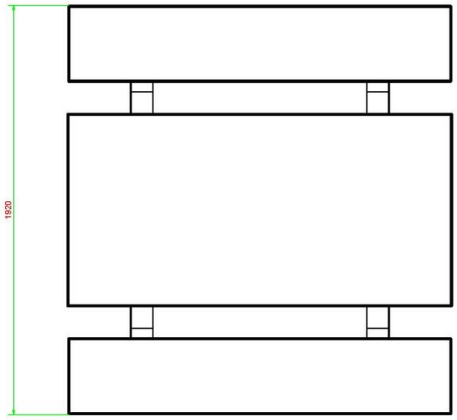

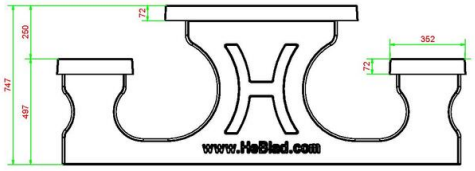

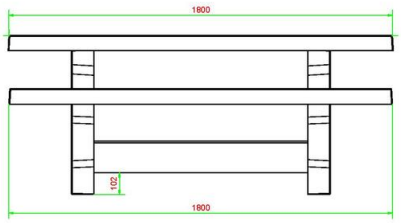

HeBlad
www.HeBlad.com
PS.ST.A

± 905 KG.

Specifications Concrete Picnic table Standard Anthracite

Product code	PS.ST.A	Seat height	50 cm
Colour	Anthracite lacquered, RAL 7016	Material seat	Beton
Dimensions (L x W x H)	180 x 192 x 75 cm	Distance legs	111 cm (center to center)
Dimensions tabletop (L x W)	180 x 90 cm	Weight	905 kg
Tabletop thickness	7 cm	Number of seats	8
Height tabletop	75 cm		

Related products

PS.ST

PS.ST.AB

PS.DL.A

OP.PS.AB

PS.STA.OV

Our products are delivered from our factory in the Netherlands.

correspondence address

HeBlad - UK
The Balance, 7th floor, Pinfold Street
S1 2GU Sheffield, South Yorkshire
T. 0114 352 0110
info@HeBlad.co.uk
www.HeBlad.co.uk

head office address

Picnic table DeLuxe

Product code: PS.DL

£ 2,450.00 excl. VAT
(£ 2,940.00 incl. VAT)

This picnic table has been ground to a smooth surface in natural concrete. The benches are provided with planks of 4 cm thick bamboo. The planks are blind anchored , thus impossible to dismantle. The picnic table is ideal along hiking- and cycling paths, but also for many other locations.

Due toe the weight (1.100 kg) and the fact that the table cannot be dismantled it does not invite vandals to ruin the table. The bamboo planks provide for a comfortable and warm seat and gives a luxurious effect.

Our products are delivered from our factory in the Netherlands.

Registred under: HeBlad BV • HM Revenue and Customs • Ruby House 8 • Ruby Place • AB10 1ZP Aberdeen
VAT Number GB381060225 • EORI Number GB381060225000 • Commercial register (NL) 170 66 364
Rabobank De Kempen, Markt 7, 5531 BA Bladel (NL) • BIC RABONL2U • Branch code RABONL2UXXX • IBAN NL 20 RABO 0107530112 GBP

correspondence address

HeBlad - UK
The Balance, 7th floor, Pinfold Street
S1 2GU Sheffield, South Yorkshire
T. 0114 352 0110
info@HeBlad.co.uk
www.HeBlad.co.uk

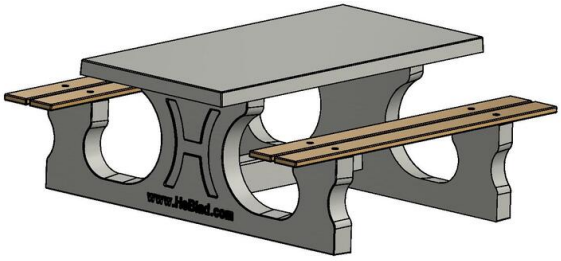

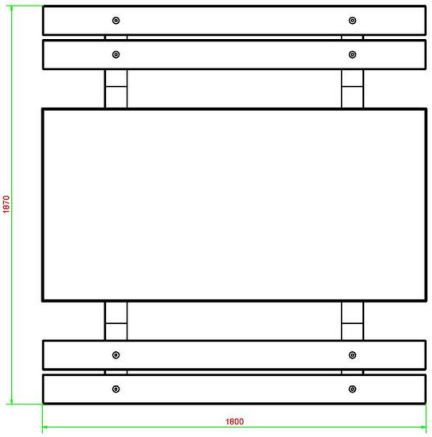

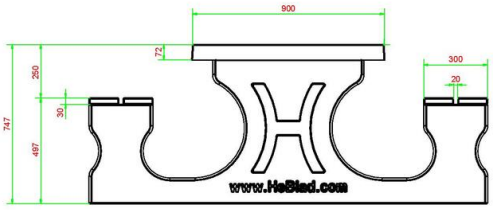

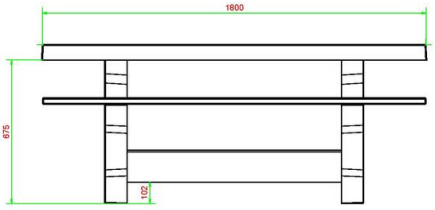

HeBlad
www.HeBlad.com
PS.DL

± 720 KG

Specifications Picnic table DeLuxe

Product code	PS.DL	Seat height	50 cm
Colour	Natural concrete	Material seat	Bamboo
Dimensions (L x W x H)	180 x 187 x 75 cm	Distance legs	111 cm (center to center)
Dimensions tabletop (L x W)	180 x 90 cm	Weight	720 kg
Tabletop thickness	7 cm	Number of seats	8
Height tabletop	75 cm		

Related products

PS.DL.AB

PS.DL.A

PS.ST

OP.PS

PS.DL.OV

Our products are delivered from our factory in the Netherlands.

correspondence address

HeBlad - UK
The Balance, 7th floor, Pinfold Street
S1 2GU Sheffield, South Yorkshire
T. 0114 352 0110
info@HeBlad.co.uk
www.HeBlad.co.uk

head office address

Picnic table DeLuxe Anthracite-Concrete

Product code: PS.DL.AB

£ 2,650.00 excl. VAT
(£ 3,180.00 incl. VAT)

Table is suitable for 4 adults. Ideal for public space. Because of the weight, the table stays in place for years.
The seats are made from very durable pressed bamboo.

The entire set is made of colored concrete. This means that the anthracite color is not created by painting, but the concrete is also colored anthracite inside.
Thanks to this method of colors, the concrete look of a concrete table has been retained.

Our products are delivered from our factory in the Netherlands.

12 October 2024 - Prices subject to change

correspondence address

HeBlad - UK
The Balance, 7th floor, Pinfold Street
S1 2GU Sheffield, South Yorkshire
T. 0114 352 0110
info@HeBlad.co.uk
www.HeBlad.co.uk

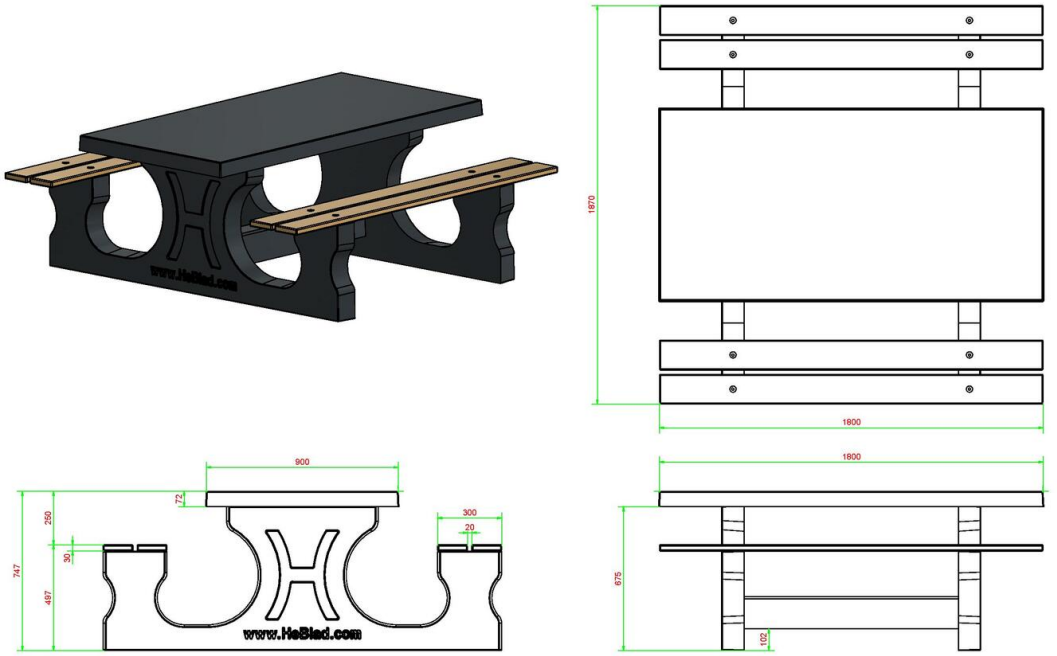

HeBlad
www.HeBlad.com
PS.DL.AB

± 720 KG.

Specifications Picnic table DeLuxe Anthracite-Concrete

Product code	PS.DL.AB	Seat height	50 cm
Colour	Anthracite concrete	Material seat	Bamboo
Dimensions (L x W x H)	180 x 187 x 75 cm	Distance legs	111 cm (center to center)
Dimensions tabletop (L x W)	180 x 90 cm	Weight	720 kg
Tabletop thickness	7 cm	Number of seats	8
Height tabletop	75 cm		

Related products

PS.DL

PS.DL.A

PS.ST.AB

OP.PS.AB

PS.DLAB.OV

Our products are delivered from our factory in the Netherlands.

Registred under: HeBlad BV • HM Revenue and Customs • Ruby House 8 • Ruby Place • AB10 1ZP Aberdeen
VAT Number GB381060225 • EORI Number GB381060225000 • Commercial register (NL) 170 66 364
Rabobank De Kempen, Markt 7, 5531 BA Bladel (NL) • BIC RABONL2U • Branch code RABONL2UXXX • IBAN NL 20 RABO 0107530112 GBP

correspondence address

HeBlad - UK
The Balance, 7th floor, Pinfold Street
S1 2GU Sheffield, South Yorkshire
T. 0114 352 0110
info@HeBlad.co.uk
www.HeBlad.co.uk

head office address

Concrete Picnic table DeLuxe Anthracite

Product code: PS.DL.A

£ 2,550.00 excl. VAT
(£ 3,060.00 incl. VAT)

This beautiful picnic table coloured in anthracite with bamboo planks is a delight for the eye. Our picnic tables differ from others by their relaxed sitting position, this has everything to do with the distance and height between the seat and the tabletop. Next to public places it is also appropriate for a nice spot in your own garden, to sit down in a relaxed atmosphere and enjoy a snack or drink.
Like all other tables by HeBlad this picnic table is moulded as well in one piece and cannot be dismantled. This adds to safety and discourages vandals.

Our products are delivered from our factory in the Netherlands.

Registred under: HeBlad BV • HM Revenue and Customs • Ruby House 8 • Ruby Place • AB10 1ZP Aberdeen
VAT Number GB381060225 • EORI Number GB381060225000 • Commercial register (NL) 170 66 364
Rabobank De Kempen, Markt 7, 5531 BA Bladel (NL) • BIC RABONL2U • Branch code RABONL2UXXX • IBAN NL 20 RABO 0107530112 GBP

correspondence address

HeBlad - UK
The Balance, 7th floor, Pinfold Street
S1 2GU Sheffield, South Yorkshire
T. 0114 352 0110
info@HeBlad.co.uk
www.HeBlad.co.uk

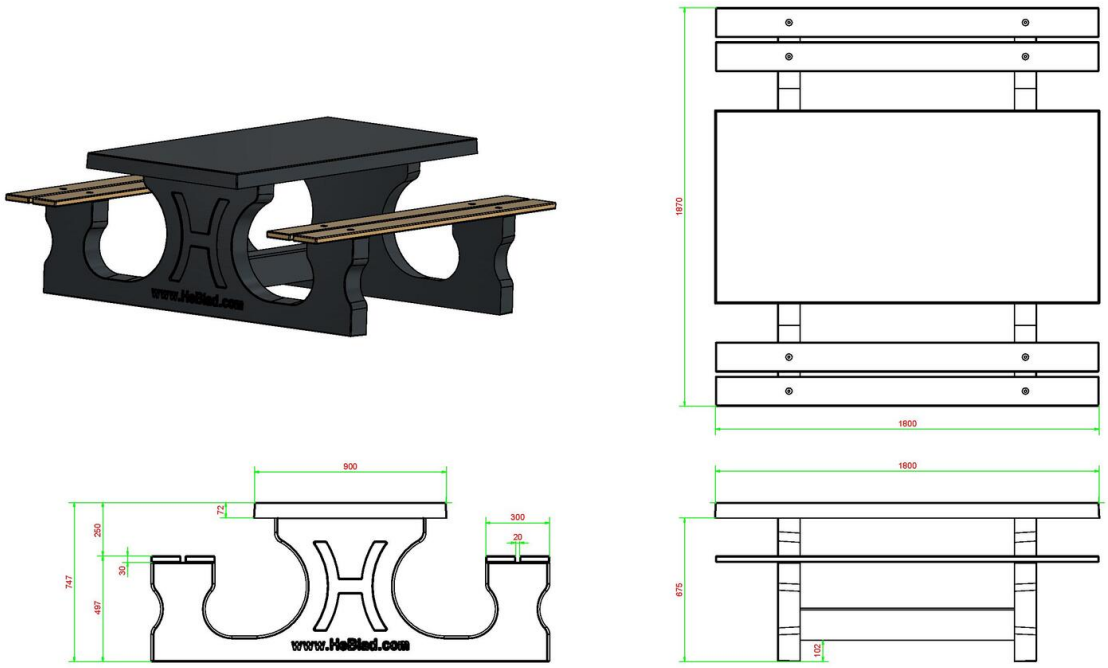

HeBlad
www.HeBlad.com
PS.DL.A

± 720 KG

Specifications Concrete Picnic table DeLuxe Anthracite

Product code	PS.DL.A	Seat height	49.7 cm
Colour	Anthracite lacquered, RAL 7016	Material seat	Bamboo
Dimensions (L x W x H)	180 x 187 x 75 cm	Distance legs	111 cm (center to center)
Dimensions tabletop (L x W)	180 x 90 cm	Weight	720 kg
Tabletop thickness	7.2 cm	Number of seats	8
Height tabletop	74.7 cm		

Related products

PS.DL

PS.DL.AB

PS.ST.A

OP.PS.AB

PS.DLA.OV

Our products are delivered from our factory in the Netherlands.

correspondence address

HeBlad - UK
The Balance, 7th floor, Pinfold Street
S1 2GU Sheffield, South Yorkshire
T. 0114 352 0110
info@HeBlad.co.uk
www.HeBlad.co.uk

head office address

Picnic table Standard Oval Natural Concrete

Product code: PS.ST.OV

£ 2,500.00 excl. VAT
(£ 3,000.00 incl. VAT)

Our brand new picnic table in an elegant design . An eye-catcher par excellence. This table also – as all the others – is moulded in one piece and therefore it cannot be dismantled. Considering the weight of this table (approximately 800 kg) it cannot be moved easily and is therefore suitable for places where you don't have supervision all the time.

Our products are delivered from our factory in the Netherlands.

13 October 2024 - Prices subject to change

correspondence address

HeBlad - UK
The Balance, 7th floor, Pinfold Street
S1 2GU Sheffield, South Yorkshire
T. 0114 352 0110
info@HeBlad.co.uk
www.HeBlad.co.uk

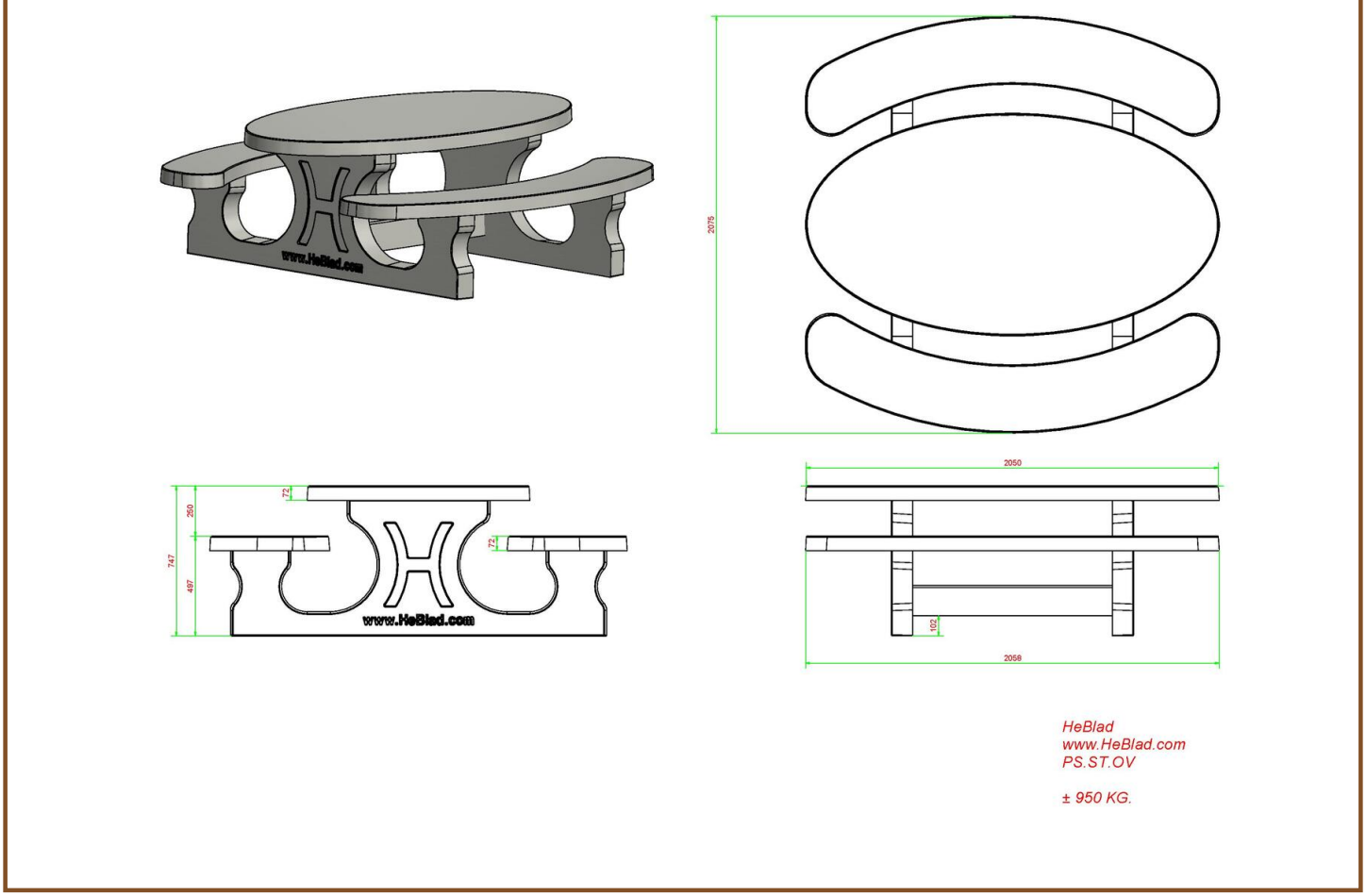

Specifications Picnic table Standard Oval Natural Concrete

Product code	PS.ST.OV	Seat height	50 cm
Colour	Natural concrete	Material seat	Beton
Dimensions (L x W x H)	211 x 205 x 75 cm	Distance legs	110 cm (center to center)
Dimensions tabletop (L x W)	205 x 110 cm	Weight	950 kg
Tabletop thickness	7 cm	Number of seats	8
Height tabletop	75 cm		

Related products

PS.STAB.OV

PS.STA.OV

PS.DL.OV

OP.PS

PS.ST.XL

Our products are delivered from our factory in the Netherlands.

correspondence address

HeBlad - UK
The Balance, 7th floor, Pinfold Street
S1 2GU Sheffield, South Yorkshire
T. 0114 352 0110
info@HeBlad.co.uk
www.HeBlad.co.uk

head office address

Picnic table Standard Oval Anthracite-Concrete

Product code: PS.STAB.OV

£ 2,650.00 excl. VAT
(£ 3,180.00 incl. VAT)

Concrete table with oval concrete seats.
Because of the oval shape a table to be able to chat in a group.

The entire set is made of colored concrete. This means that the anthracite color is not created by painting, but the concrete is also colored anthracite inside.
Thanks to this method of colors, the concrete look of a concrete table has been retained.

Our products are delivered from our factory in the Netherlands.

Registred under: HeBlad BV • HM Revenue and Customs • Ruby House 8 • Ruby Place • AB10 1ZP Aberdeen
VAT Number GB381060225 • EORI Number GB381060225000 • Commercial register (NL) 170 66 364
Rabobank De Kempen, Markt 7, 5531 BA Bladel (NL) • BIC RABONL2U • Branch code RABONL2UXXX • IBAN NL 20 RABO 0107530112 GBP

correspondence address

HeBlad - UK
The Balance, 7th floor, Pinfold Street
S1 2GU Sheffield, South Yorkshire
T. 0114 352 0110
info@HeBlad.co.uk
www.HeBlad.co.uk

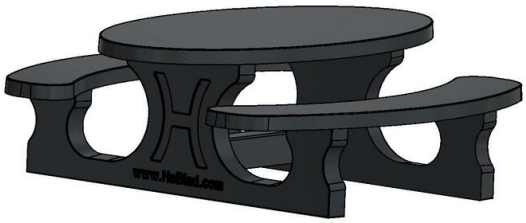

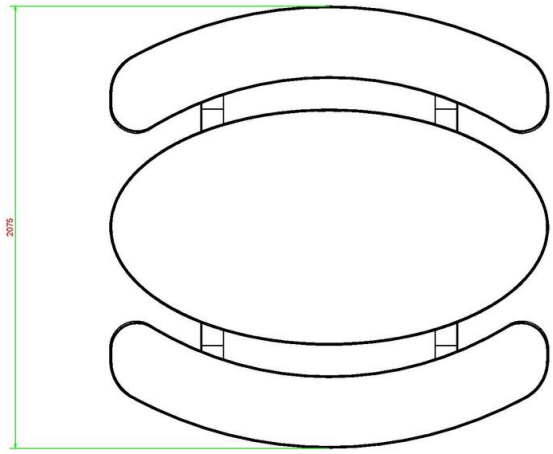

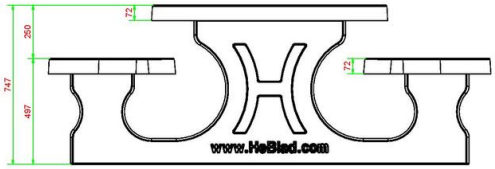

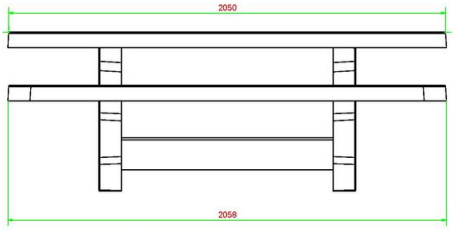

HeBlad
www.HeBlad.com
PS.STAB.OV

± 950 KG.

Specifications Picnic table Standard Oval Anthracite-Concrete

Product code	PS.STAB.OV	Seat height	50 cm
Colour	Anthracite concrete	Material seat	Beton
Dimensions (L x W x H)	211 x 205 x 75 cm	Distance legs	110 cm (center to center)
Dimensions tabletop (L x W)	205 x 110 cm	Weight	950 kg
Tabletop thickness	7 cm	Number of seats	8
Height tabletop	75 cm		

Related products

PS.ST.OV

PS.STA.OV

PS.DLAB.OV

OP.PS.AB

PS.STAB.XL

Our products are delivered from our factory in the Netherlands.

correspondence address

HeBlad - UK
The Balance, 7th floor, Pinfold Street
S1 2GU Sheffield, South Yorkshire
T. 0114 352 0110
info@HeBlad.co.uk
www.HeBlad.co.uk

head office address

Concrete Picnic table Standard Oval Anthracite

Product code: PS.STA.OV

£ 2,600.00 excl. VAT
(£ 3,120.00 incl. VAT)

This elegant design and the anthracite colouring gives this table a warm appearance. Whenever the strength of concrete and a beautiful view is required, then this picnic table is very suitable. This picnic table is manufactured in one piece, therefore it is almost indestructible. You will enjoy this table for many years.

Our products are delivered from our factory in the Netherlands.

Registred under: HeBlad BV • HM Revenue and Customs • Ruby House 8 • Ruby Place • AB10 1ZP Aberdeen
VAT Number GB381060225 • EORI Number GB381060225000 • Commercial register (NL) 170 66 364
Rabobank De Kempen, Markt 7, 5531 BA Bladel (NL) • BIC RABONL2U • Branch code RABONL2UXXX • IBAN NL 20 RABO 0107530112 GBP

correspondence address

HeBlad - UK
The Balance, 7th floor, Pinfold Street
S1 2GU Sheffield, South Yorkshire
T. 0114 352 0110
info@HeBlad.co.uk
www.HeBlad.co.uk

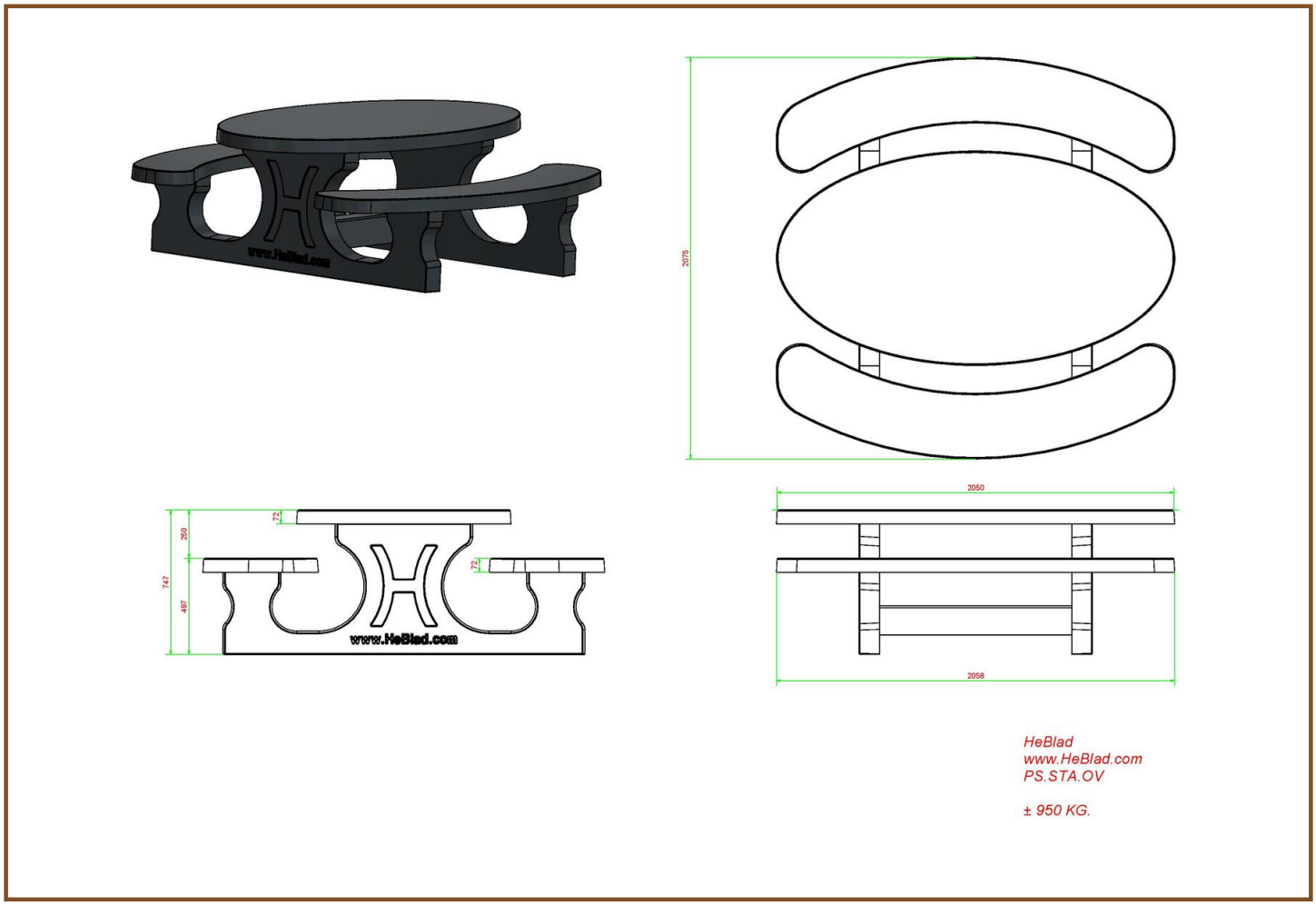

Specifications Concrete Picnic table Standard Oval Anthracite

Product code	PS.STA.OV	Seat height	50 cm
Colour	Anthracite lacquered, RAL 7016	Material seat	Beton
Dimensions (L x W x H)	211 x 205 x 75 cm	Distance legs	110 cm (center to center)
Dimensions tabletop (L x W)	205 x 110 cm	Weight	950 kg
Tabletop thickness	7 cm	Number of seats	8
Height tabletop	75 cm		

Related products

PS.ST.OV

PS.STAB.OV

PS.DLA.OV

OP.PS.AB

PS.STA.XL

Our products are delivered from our factory in the Netherlands.

correspondence address

HeBlad - UK
The Balance, 7th floor, Pinfold Street
S1 2GU Sheffield, South Yorkshire
T. 0114 352 0110
info@HeBlad.co.uk
www.HeBlad.co.uk

head office address

Picnic table DeLuxe Oval Natural Concrete

Product code: PS.DL.OV

£ 2,750.00 excl. VAT
(£ 3,300.00 incl. VAT)

We are very proud of our newest product, a picnic table in a beautiful oval design. This picnic table is furnished with bamboo planks of very high quality. These planks are “blind” secured, thus almost impossible to remove. Due to the beautiful design this picnic table is a delight for the eye. The first tables of this kind, by the way, have already been delivered in to the Caribbean.

Our products are delivered from our factory in the Netherlands.

12 October 2024 - Prices subject to change

correspondence address

HeBlad - UK
The Balance, 7th floor, Pinfold Street
S1 2GU Sheffield, South Yorkshire
T. 0114 352 0110
info@HeBlad.co.uk
www.HeBlad.co.uk

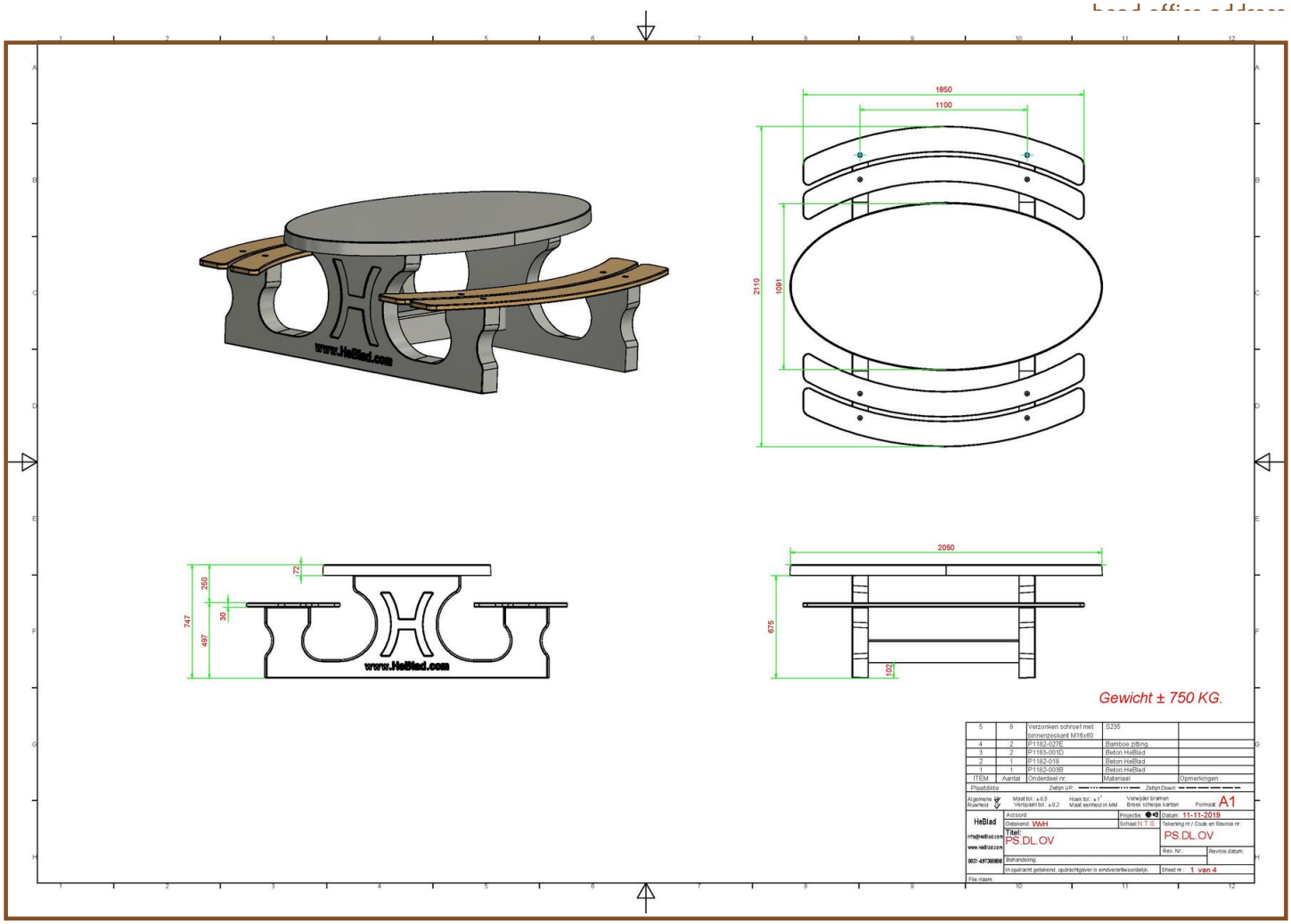

Specifications Picnic table DeLuxe Oval Natural Concrete

Product code	PS.DL.OV	Seat height	50 cm
Colour	Natural concrete	Material seat	Bamboo
Dimensions (L x W x H)	211 x 205 x 75 cm	Distance legs	110 cm (center to center)
Dimensions tabletop (L x W)	205 x 110 cm	Weight	750 kg
Tabletop thickness	7 cm	Number of seats	8
Height tabletop	75 cm		

Related products

PS.DLAB.OV

PS.DLA.OV

PS.ST

OP.PS

PS.DL.RT

Our products are delivered from our factory in the Netherlands.

Registred under: HeBlad BV • HM Revenue and Customs • Ruby House 8 • Ruby Place • AB10 1ZP Aberdeen
VAT Number GB381060225 • EORI Number GB381060225000 • Commercial register (NL) 170 66 364
Rabobank De Kempen, Markt 7, 5531 BA Bladel (NL) • BIC RABONL2U • Branch code RABONL2UXXX • IBAN NL 20 RABO 0107530112 GBP

correspondence address

HeBlad - UK
The Balance, 7th floor, Pinfold Street
S1 2GU Sheffield, South Yorkshire
T. 0114 352 0110
info@HeBlad.co.uk
www.HeBlad.co.uk

head office address

Picnic table DeLuxe Oval Anthracite-Concrete

Product code: PS.DLAB.OV

£ 2,950.00 excl. VAT
(£ 3,540.00 incl. VAT)

You can catch up on this picnic set in a round.
The bamboo seats also give a comfortable feeling to sit on during the winter.

The entire set is made of colored concrete. This means that the anthracite color is not created by painting, but the concrete is also colored anthracite inside.
Thanks to this method of colors, the concrete look of a concrete table has been retained.

Our products are delivered from our factory in the Netherlands.

12 October 2024 - Prices subject to change

correspondence address

HeBlad - UK
The Balance, 7th floor, Pinfold Street
S1 2GU Sheffield, South Yorkshire
T. 0114 352 0110
info@HeBlad.co.uk
www.HeBlad.co.uk

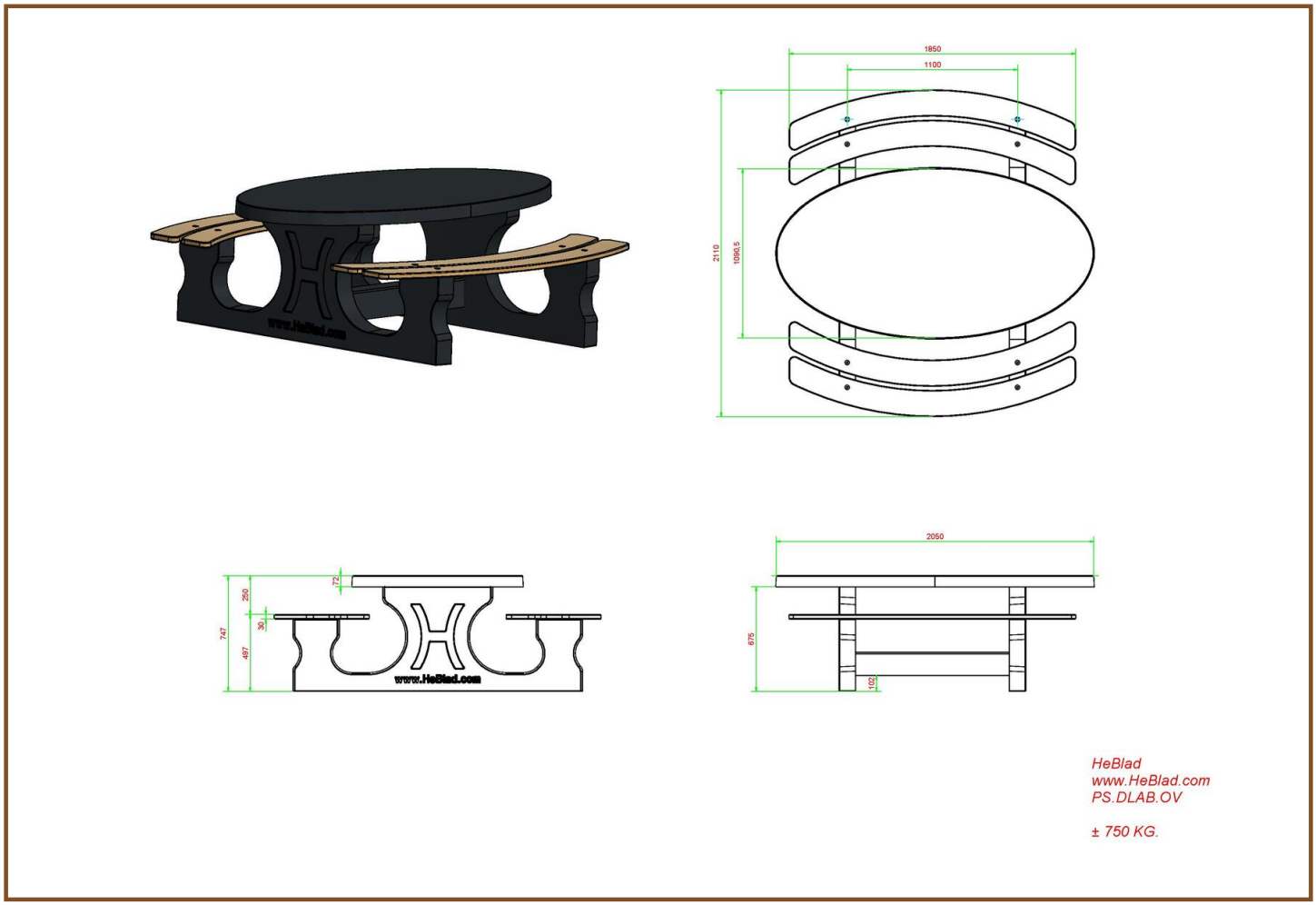

Specifications Picnic table DeLuxe Oval Anthracite-Concrete

Product code	PS.DLAB.OV	Seat height	50 cm
Colour	Anthracite concrete	Material seat	Bamboo
Dimensions (L x W x H)	211 x 205 x 75 cm	Distance legs	110 cm (center to center)
Dimensions tabletop (L x W)	205 x 110 cm	Weight	750 kg
Tabletop thickness	7 cm	Number of seats	8
Height tabletop	75 cm		

Related products

PS.DL.OV

PS.DL.A

PS.STAB.OV

OP.PS.AB

PS.DLAB.RT

Our products are delivered from our factory in the Netherlands.

correspondence address

HeBlad - UK
The Balance, 7th floor, Pinfold Street
S1 2GU Sheffield, South Yorkshire
T. 0114 352 0110
info@HeBlad.co.uk
www.HeBlad.co.uk

head office address

Concrete Picnic table DeLuxe Oval Anthracite

Product code: PS.DLA.OV

£ 2,800.00 excl. VAT
(£ 3,360.00 incl. VAT)

Delightful to the eye this oval picnic table coloured in beautiful anthracite lacquer finish of high quality with bamboo seating. Through the warm anthracite colour it is hard to believe that this is a concrete picnic table.

Our picnic tables are well known for their relaxed seating. Through the well thought out distance between the height of the seat and the tabletop you are assured of a comfortable seat.

Our products are delivered from our factory in the Netherlands.

12 October 2024 - Prices subject to change

correspondence address

HeBlad - UK
The Balance, 7th floor, Pinfold Street
S1 2GU Sheffield, South Yorkshire
T. 0114 352 0110
info@HeBlad.co.uk
www.HeBlad.co.uk

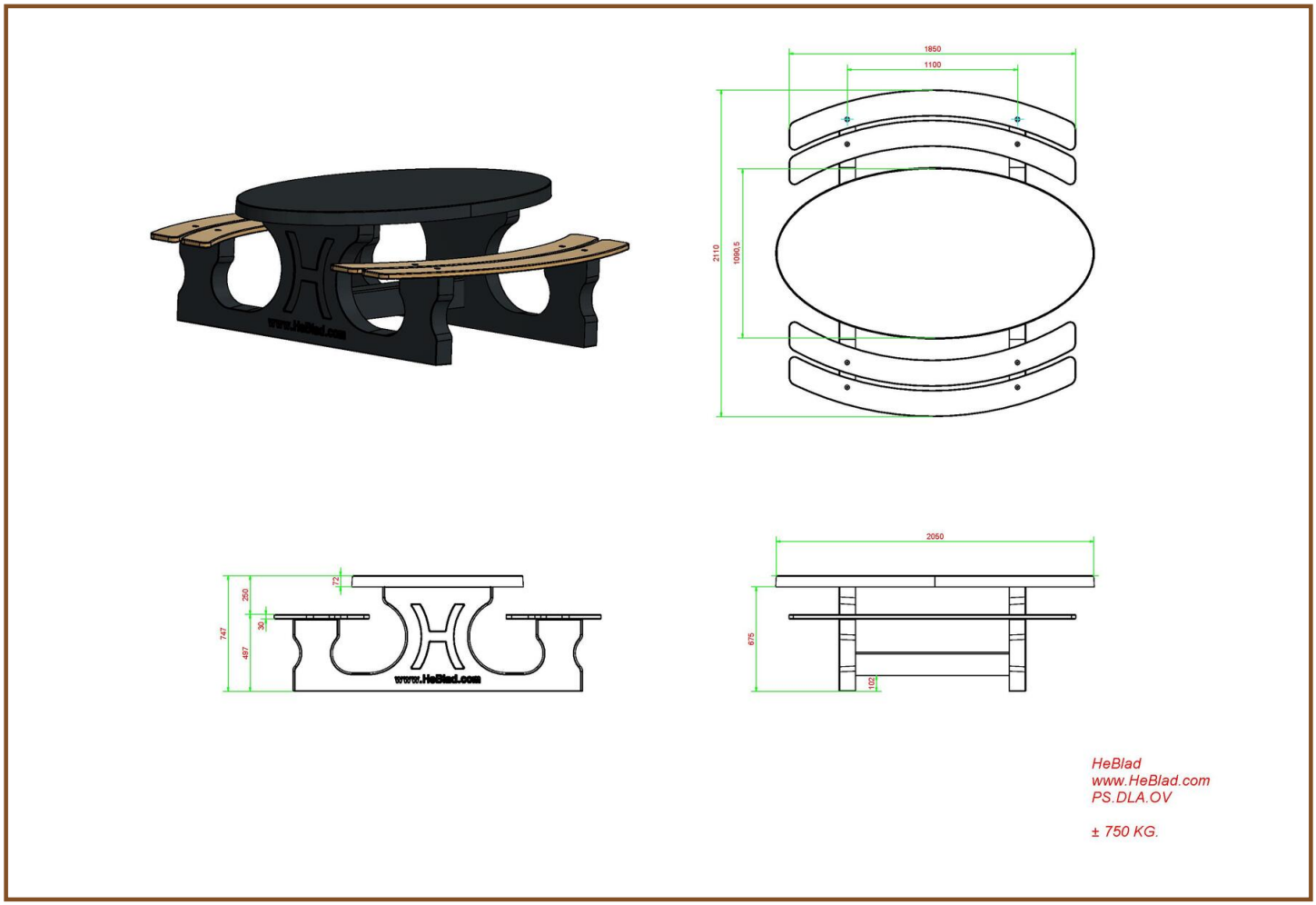

Specifications Concrete Picnic table DeLuxe Oval Anthracite

Product code	PS.DLA.OV	Seat height	50 cm
Colour	Anthracite lacquered, RAL 7016	Material seat	Bamboo
Dimensions (L x W x H)	211 x 205 x 75 cm	Distance legs	110 cm (center to center)
Dimensions tabletop (L x W)	205 x 110 cm	Weight	750 kg
Tabletop thickness	7 cm	Number of seats	8
Height tabletop	75 cm		

Related products

PS.DL.OV

PS.DLAB.OV

PS.STA.OV

OP.PS.AB

PS.DLA.RT

Our products are delivered from our factory in the Netherlands.

correspondence address

HeBlad - UK
The Balance, 7th floor, Pinfold Street
S1 2GU Sheffield, South Yorkshire
T. 0114 352 0110
info@HeBlad.co.uk
www.HeBlad.co.uk

head office address

Picnic table DeLuxe Natural Concrete Wheelchair accessible

£ 2,550.00 excl. VAT
(£ 3,060.00 incl. VAT)

Product code: PS.DL.RT

Special picnic table for a wheelchair user. Because user of wheelchairs can never pull up to a picnic table, we have designed this table . The wheelchair user can easily get close to the rest of the group of people around the table.

At one side the tabletop is extended by 60 cm. Also the whole undercarriage is slightly higher to create free space for the legs of 60 cm depth and 71 cm height. Because the table is slightly higher, people with leg problems can easily sit at the table.

Our products are delivered from our factory in the Netherlands.

Registred under: HeBlad BV • HM Revenue and Customs • Ruby House 8 • Ruby Place • AB10 1ZP Aberdeen
VAT Number GB381060225 • EORI Number GB381060225000 • Commercial register (NL) 170 66 364
Rabobank De Kempen, Markt 7, 5531 BA Bladel (NL) • BIC RABONL2U • Branch code RABONL2UXXX • IBAN NL 20 RABO 0107530112 GBP

correspondence address

HeBlad - UK
The Balance, 7th floor, Pinfold Street
S1 2GU Sheffield, South Yorkshire
T. 0114 352 0110
info@HeBlad.co.uk
www.HeBlad.co.uk

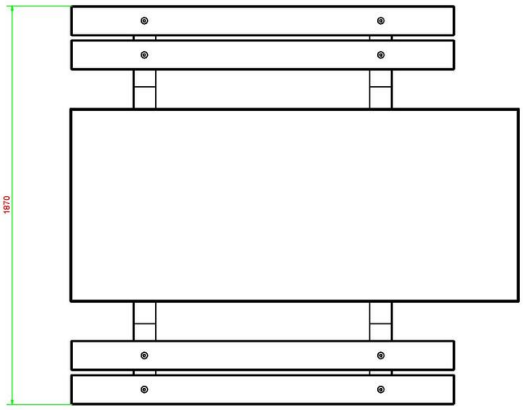

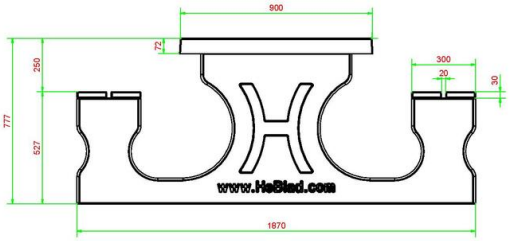

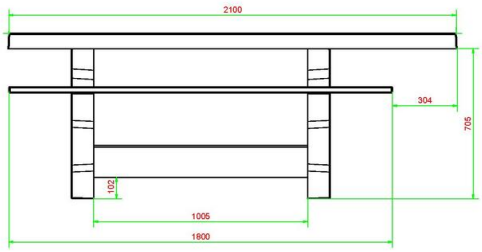

HeBlad
www.HeBlad.com
PS.DL.RT

± 790 kg

Specifications Picnic table DeLuxe Natural Concrete Wheelchair accessible

Product code	PS.DL.RT	Seat height	50 cm
Colour	Natural concrete	Material seat	Bamboo
Dimensions (L x W x H)	210 x 187 x 77 cm	Distance legs	111 cm (center to center)
Dimensions tabletop (L x W)	210 x 90 cm	Weight	790 kg
Tabletop thickness	7 cm	Number of seats	7
Height tabletop	77 cm		

Related products

PS.DLAB.RT

PS.DLA.RT

PS.ST.XL

OP.PS

PS.DL

Our products are delivered from our factory in the Netherlands.

correspondence address

HeBlad - UK
The Balance, 7th floor, Pinfold Street
S1 2GU Sheffield, South Yorkshire
T. 0114 352 0110
info@HeBlad.co.uk
www.HeBlad.co.uk

head office address

Picnic table DeLuxe Anthracite-Concrete Wheelchair accessible

Product code: PS.DLAB.RT

£ 2,750.00 excl. VAT
(£ 3,300.00 incl. VAT)

This picnic set accommodates a ninth person in a wheelchair, to take place at the end of the table.
Due to the extra height and extra length on one side, this table meets the standards for a wheelchair accessible picnic table.

The entire set is made of colored concrete. This means that the anthracite color is not created by painting, but the concrete is also colored anthracite inside.
Thanks to this method of colors, the concrete look of a concrete table has been retained.

Our products are delivered from our factory in the Netherlands.

Registred under: HeBlad BV • HM Revenue and Customs • Ruby House 8 • Ruby Place • AB10 1ZP Aberdeen
VAT Number GB381060225 • EORI Number GB381060225000 • Commercial register (NL) 170 66 364
Rabobank De Kempen, Markt 7, 5531 BA Bladel (NL) • BIC RABONL2U • Branch code RABONL2UXXX • IBAN NL 20 RABO 0107530112 GBP

correspondence address

HeBlad - UK
The Balance, 7th floor, Pinfold Street
S1 2GU Sheffield, South Yorkshire
T. 0114 352 0110
info@HeBlad.co.uk
www.HeBlad.co.uk

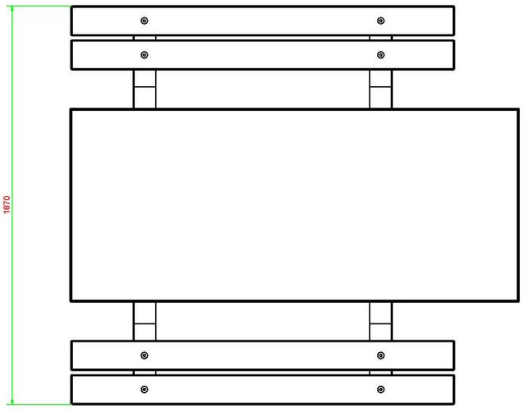

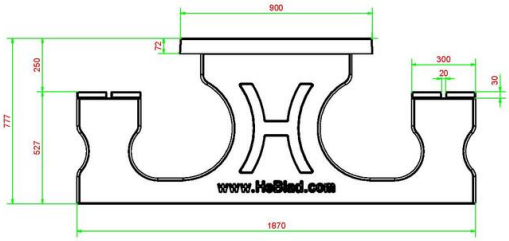

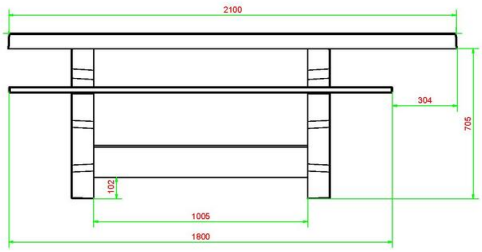

HeBlad
www.HeBlad.com
PS.DLAB.RT

± 790 kg

Specifications Picnic table DeLuxe Anthracite-Concrete Wheelchair accessible

Product code	PS.DLAB.RT	Seat height	50 cm
Colour	Anthracite concrete	Material seat	Bamboo
Dimensions (L x W x H)	210 x 187 x 77 cm	Distance legs	111 cm (center to center)
Dimensions tabletop (L x W)	210 x 90 cm	Weight	790 kg
Tabletop thickness	7 cm	Number of seats	7
Height tabletop	77 cm		

Related products

PS.DL.RT

PS.DLA.RT

PS.STAB.XL

OP.PS.AB

PS.DL.AB

Our products are delivered from our factory in the Netherlands.

correspondence address

HeBlad - UK
The Balance, 7th floor, Pinfold Street
S1 2GU Sheffield, South Yorkshire
T. 0114 352 0110
info@HeBlad.co.uk
www.HeBlad.co.uk

head office address

Concrete Picnic table DeLuxe Anthracite Wheelchair accessible

£ 2,625.00 excl. VAT
(£ 3,150.00 incl. VAT)

Product code: PS.DLA.RT

This concrete picnic table is sprayed in anthracite and designed so that a wheelchair user can sit at the table together with their companions. Thus not along side, but quite normal with legs under the table, there is a free space of 60 depth by 71 cm height.

Like all our other picnic tables this product is also is vandal-proof and ideal for placing outside.

Our products are delivered from our factory in the Netherlands.

Registred under: HeBlad BV • HM Revenue and Customs • Ruby House 8 • Ruby Place • AB10 1ZP Aberdeen
VAT Number GB381060225 • EORI Number GB381060225000 • Commercial register (NL) 170 66 364
Rabobank De Kempen, Markt 7, 5531 BA Bladel (NL) • BIC RABONL2U • Branch code RABONL2UXXX • IBAN NL 20 RABO 0107530112 GBP

correspondence address

HeBlad - UK
The Balance, 7th floor, Pinfold Street
S1 2GU Sheffield, South Yorkshire
T. 0114 352 0110
info@HeBlad.co.uk
www.HeBlad.co.uk

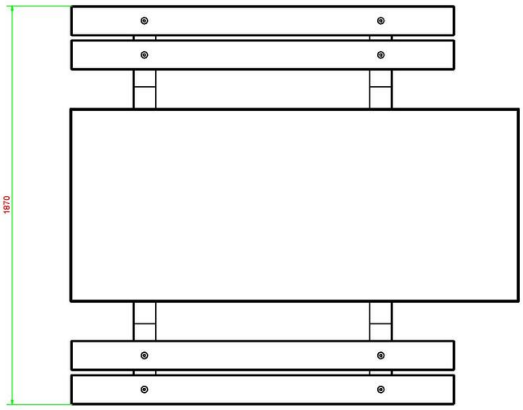

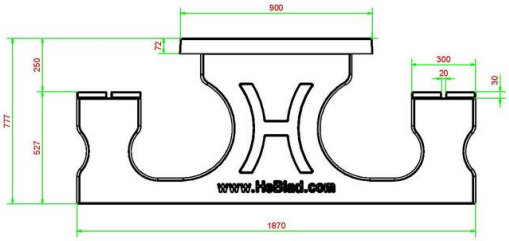

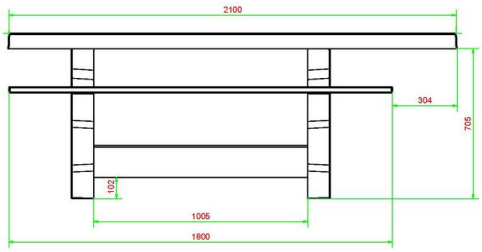

HeBlad
www.HeBlad.com
PS.DLA.RT

± 790 kg

Specifications Concrete Picnic table DeLuxe Anthracite Wheelchair accessible

Product code	PS.DLA.RT	Seat height	50 cm
Colour	Anthracite lacquered, RAL 7016	Material seat	Bamboo
Dimensions (L x W x H)	210 x 187 x 77 cm	Distance legs	111 cm (center to center)
Dimensions tabletop (L x W)	210 x 90 cm	Weight	790 kg
Tabletop thickness	7 cm	Number of seats	7
Height tabletop	77 cm		

Related products

PS.DL.OV

BB.ST.A

HB.FB.A

PP.GR

OP.PS.AB

Our products are delivered from our factory in the Netherlands.

correspondence address

HeBlad - UK
The Balance, 7th floor, Pinfold Street
S1 2GU Sheffield, South Yorkshire
T. 0114 352 0110
info@HeBlad.co.uk
www.HeBlad.co.uk

head office address

Picnic table Standard Natural Concrete Wheelchair accessible

Product code: PS.ST.RT

£ 2,500.00 excl. VAT
(£ 3,000.00 incl. VAT)

Soon more information about this product

Our products are delivered from our factory in the Netherlands.

12 October 2024 - Prices subject to change

correspondence address

HeBlad - UK
The Balance, 7th floor, Pinfold Street
S1 2GU Sheffield, South Yorkshire
T. 0114 352 0110
info@HeBlad.co.uk
www.HeBlad.co.uk

head office address

HeBlad BV
Diamantweg 22
NL - 5527 LC Hapert

Specifications Picnic table Standard Natural Concrete Wheelchair accessible

Product code	PS.ST.RT	Seat height	50 cm
Colour	Natural concrete	Material seat	Beton
Dimensions (L x W x H)	210 x 90 x 77 cm	Distance legs	111 cm (Hart op Hart)
Dimensions tabletop (L x W)	210 x 90	Weight	970 kg
Tabletop thickness	7 cm	Number of seats	7
Height tabletop	77 cm		

Related products

PS.DL.RT

PS.DLAB.RT

Our products are delivered from our factory in the Netherlands.

correspondence address

HeBlad - UK
The Balance, 7th floor, Pinfold Street
S1 2GU Sheffield, South Yorkshire
T. 0114 352 0110
info@HeBlad.co.uk
www.HeBlad.co.uk

head office address

Picnic table Standard Anthracite-Concrete Wheelchair accessible

Product code: PS.STAB.RT

£ 2,650.00 excl. VAT
(£ 3,180.00 incl. VAT)

Soon more information about this product

Our products are delivered from our factory in the Netherlands.

12 October 2024 - Prices subject to change

correspondence address

HeBlad - UK
The Balance, 7th floor, Pinfold Street
S1 2GU Sheffield, South Yorkshire
T. 0114 352 0110
info@HeBlad.co.uk
www.HeBlad.co.uk

head office address

HeBlad BV
Diamantweg 22
NL - 5527 LC Hapert

Specifications Picnic table Standard Anthracite-Concrete Wheelchair accessible

Product code	PS.STAB.RT	Seat height	50 cm
Colour	Anthracite concrete	Material seat	Beton
Dimensions (L x W x H)	210 x 90 x 77 cm	Distance legs	111 cm (center to center)
Dimensions tabletop (L x W)	210 x 90 cm	Weight	970 kg
Tabletop thickness	7 cm	Number of seats	7
Height tabletop	77 cm		

Our products are delivered from our factory in the Netherlands.

correspondence address

HeBlad - UK
The Balance, 7th floor, Pinfold Street
S1 2GU Sheffield, South Yorkshire
T. 0114 352 0110
info@HeBlad.co.uk
www.HeBlad.co.uk

head office address

Concrete Picnic table Standard Anthracite Wheelchair accessible

Product code: PS.STA.RT

£ 2,600.00 excl. VAT
(£ 3,120.00 incl. VAT)

Soon more information about this product

Our products are delivered from our factory in the Netherlands.

12 October 2024 - Prices subject to change

correspondence address

HeBlad - UK
The Balance, 7th floor, Pinfold Street
S1 2GU Sheffield, South Yorkshire
T. 0114 352 0110
info@HeBlad.co.uk
www.HeBlad.co.uk

head office address

HeBlad BV
Diamantweg 22
NL - 5527 LC Hapert

Specifications Concrete Picnic table Standard Anthracite Wheelchair accessible

Product code	PS.STA.RT	Seat height	50 cm
Colour	Anthracite lacquered, RAL 7016	Material seat	Beton
Dimensions (L x W x H)	210 x 90 x 77 cm	Distance legs	111 cm (center to center)
Dimensions tabletop (L x W)	210 x 90 cm	Weight	970 kg
Tabletop thickness	7 cm	Number of seats	7
Height tabletop	77 cm		

Our products are delivered from our factory in the Netherlands.

correspondence address

HeBlad - UK
The Balance, 7th floor, Pinfold Street
S1 2GU Sheffield, South Yorkshire
T. 0114 352 0110
info@HeBlad.co.uk
www.HeBlad.co.uk

head office address

Picnic table Standard XL Natural Concrete

Product code: PS.ST.XL

£ 4,750.00 excl. VAT
(£ 5,700.00 incl. VAT)

This concrete table is very large and has a exceptionally strong construction. The fact that the legs and the seats are moulded together with the table plate it is almost impossible for the user to move the table and that means also that it is vandal proof.

There are a lot of places where this picnic table can be useful. This table is very convenient for sporting clubs, because a complete football team can sit at it, but also for schools to take some outdoor lesson in good weather. Of course this table is not only suitable for outside lesson but also ideal for an enjoyable get together.

Our products are delivered from our factory in the Netherlands.

12 October 2024 - Prices subject to change

correspondence address

HeBlad - UK
The Balance, 7th floor, Pinfold Street
S1 2GU Sheffield, South Yorkshire
T. 0114 352 0110
info@HeBlad.co.uk
www.HeBlad.co.uk

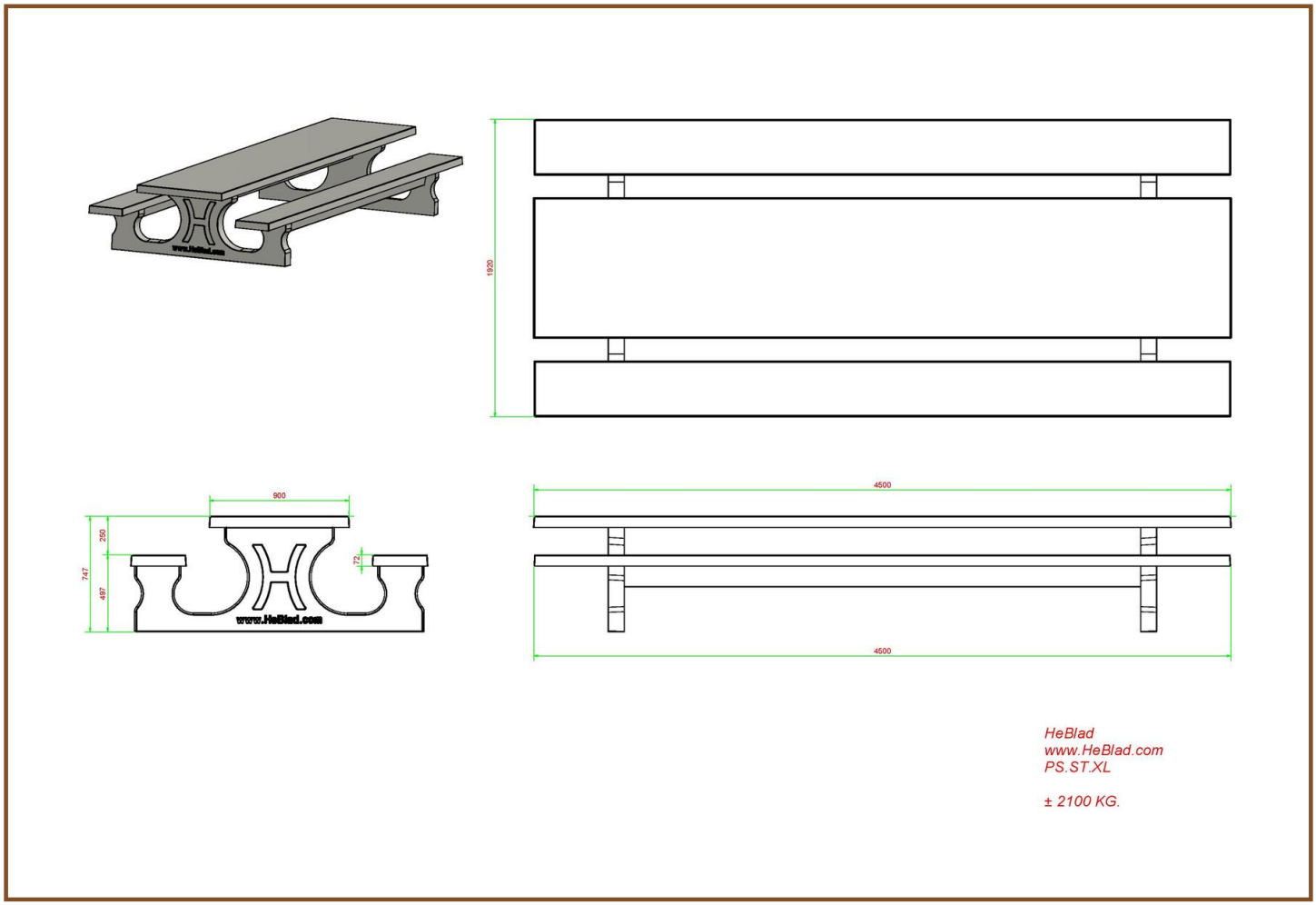

Specifications Picnic table Standard XL Natural Concrete

Product code	PS.ST.XL	Tabletop thickness	7 cm
Colour	Natural concrete	Seat height	50 cm
Dimensions (L x W x H)	450 x 192 x 75 cm	Weight	2100 kg
Dimensions tabletop (L x W)	450 x 90 cm	Material seat	Beton
Height tabletop	75 cm	Distance legs	355 cm (hart op hart)

Related products

PS.STAB.XL

PS.STA.XL

PS.DL.RT

OP.PS

PS.ST

Our products are delivered from our factory in the Netherlands.

correspondence address

HeBlad - UK
The Balance, 7th floor, Pinfold Street
S1 2GU Sheffield, South Yorkshire
T. 0114 352 0110
info@HeBlad.co.uk
www.HeBlad.co.uk

head office address

Picnic table Standard XL Anthracite-Concrete

Product code: PS.STAB.XL

£ 4,900.00 excl. VAT
(£ 5,880.00 incl. VAT)

This very large concrete picnic table can accommodate 18-20 people.
The ideal concrete table for large groups of people in public space.

The entire set is made of colored concrete. This means that the anthracite color is not created by painting, but the concrete is also colored anthracite inside.
Thanks to this method of colors, the concrete look of a concrete table has been retained.

Our products are delivered from our factory in the Netherlands.

12 October 2024 - Prices subject to change

correspondence address

HeBlad - UK
The Balance, 7th floor, Pinfold Street
S1 2GU Sheffield, South Yorkshire
T. 0114 352 0110
info@HeBlad.co.uk
www.HeBlad.co.uk

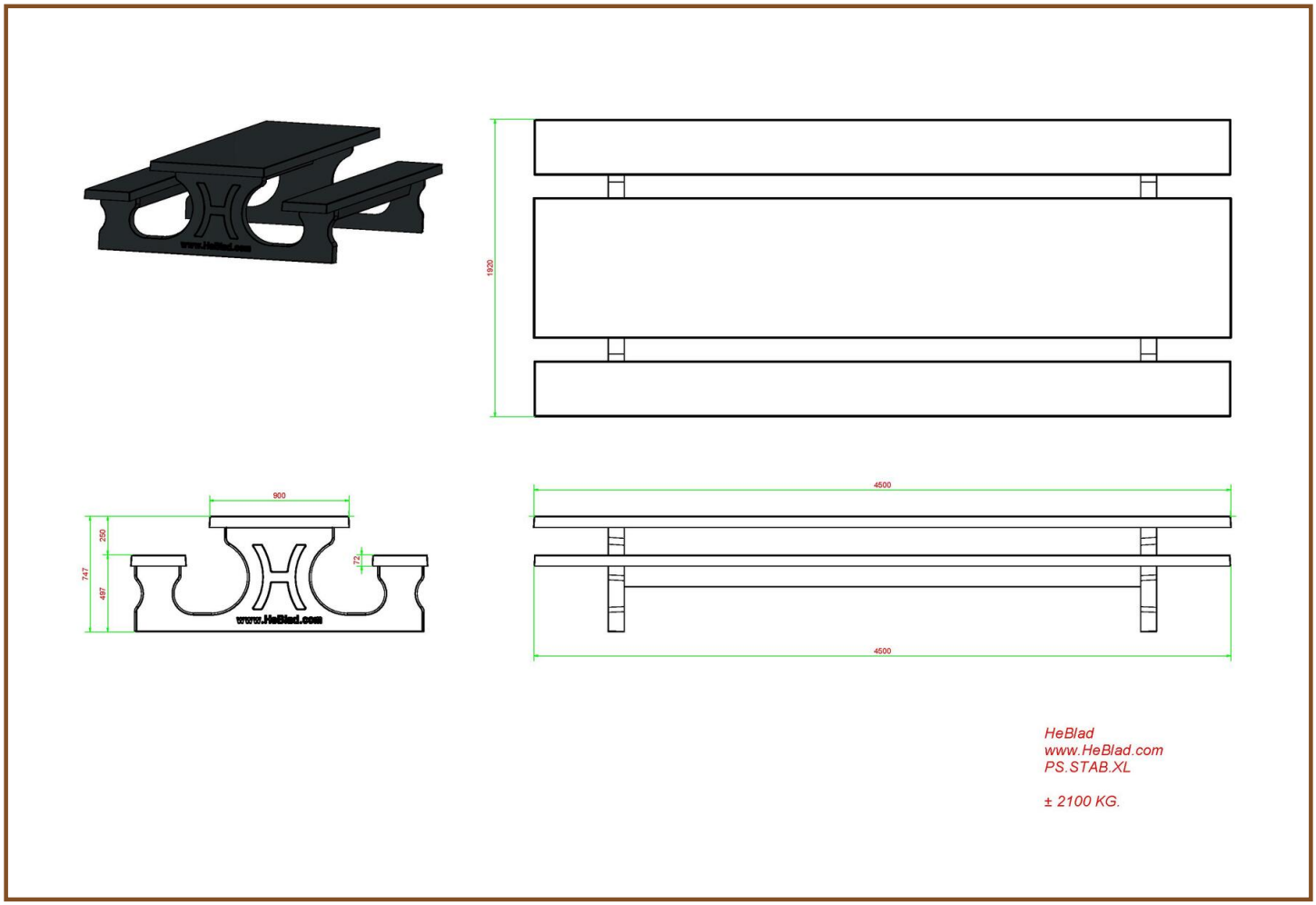

Specifications Picnic table Standard XL Anthracite-Concrete

Product code	PS.STAB.XL	Tabletop thickness	7 cm
Colour	Anthracite concrete	Seat height	50 cm
Dimensions (L x W x H)	450 x 192 x 75 cm	Weight	2100 kg
Dimensions tabletop (L x W)	450 x 90 cm	Material seat	Beton
Height tabletop	75 cm	Distance legs	355 (hart op hart)

Related products

PS.ST.XL

PS.STA.XL

PS.DLAB.RT

OP.PS.AB

PS.ST.AB

Our products are delivered from our factory in the Netherlands.

correspondence address

HeBlad - UK
The Balance, 7th floor, Pinfold Street
S1 2GU Sheffield, South Yorkshire
T. 0114 352 0110
info@HeBlad.co.uk
www.HeBlad.co.uk

head office address

Concrete Picnic table Standard XL Anthracite

Product code: PS.STA.XL

£ 4,900.00 excl. VAT
(£ 5,880.00 incl. VAT)

Suitable for 18 to 20 people. Our picnic tables are well known for their relaxed sitting position due to the well thought-out distance and height between the seats and tabletop. Like all other products of HeBlad this picnic table is moulded in one piece. The anthracite colouring gives this table a warm appearance.

In contrast to all other tables, this table can only be unloaded directly from the truck and then rolled further across level and paved surface. For this we need the help of 3 strong people.

Our products are delivered from our factory in the Netherlands.

Registred under: HeBlad BV • HM Revenue and Customs • Ruby House 8 • Ruby Place • AB10 1ZP Aberdeen
VAT Number GB381060225 • EORI Number GB381060225000 • Commercial register (NL) 170 66 364
Rabobank De Kempen, Markt 7, 5531 BA Bladel (NL) • BIC RABONL2U • Branch code RABONL2UXXX • IBAN NL 20 RABO 0107530112 GBP

correspondence address

HeBlad - UK
The Balance, 7th floor, Pinfold Street
S1 2GU Sheffield, South Yorkshire
T. 0114 352 0110
info@HeBlad.co.uk
www.HeBlad.co.uk

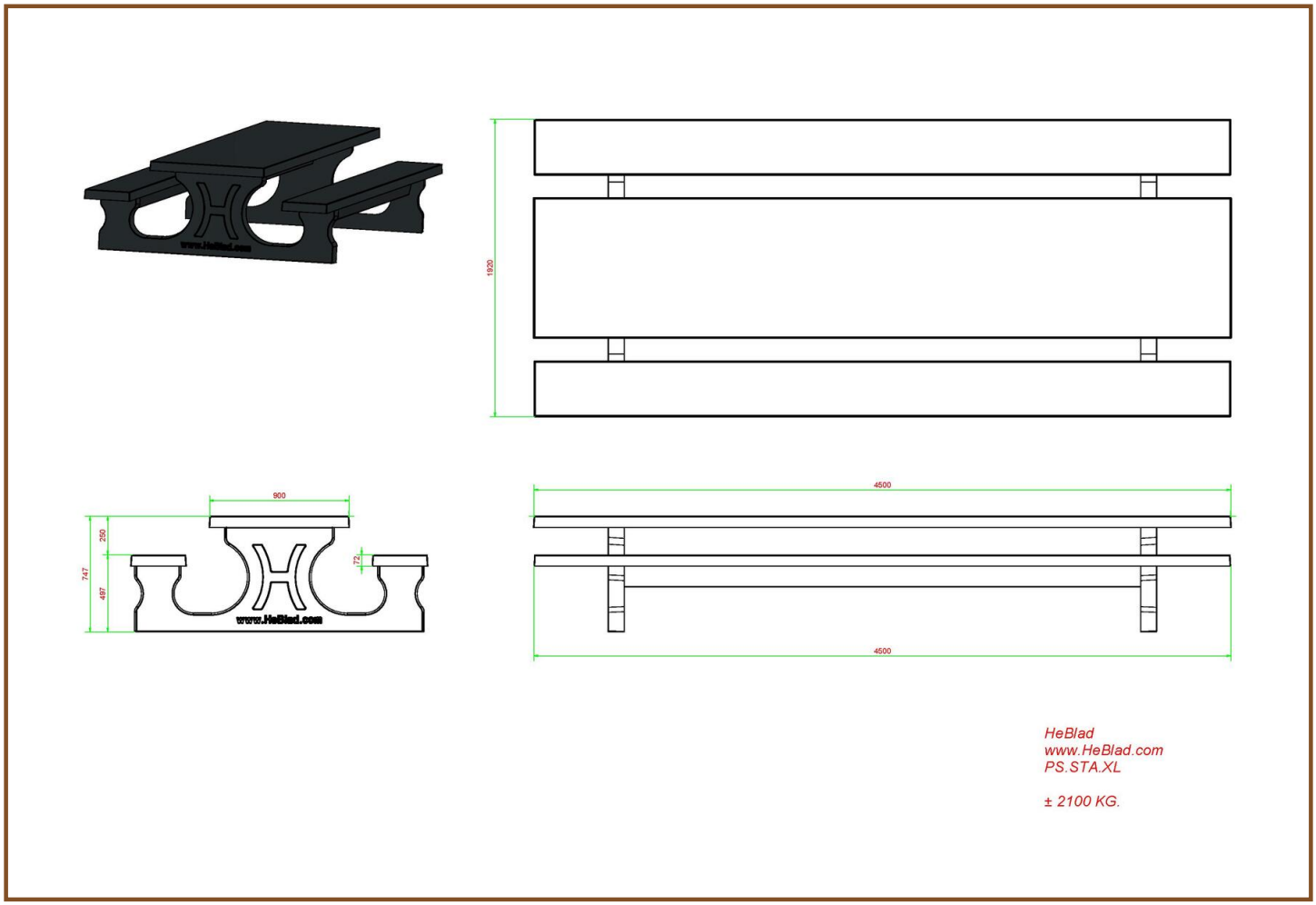

Specifications Concrete Picnic table Standard XL Anthracite

Product code	PS.STA.XL	Tabletop thickness	7 cm
Colour	Anthracite lacquered, RAL 7016	Seat height	50 cm
Dimensions (L x W x H)	450 x 192 x 75 cm	Weight	2100 kg
Dimensions tabletop (L x W)	450 x 90 cm	Material seat	Beton
Height tabletop	75 cm	Distance legs	355 (hart op hart)

Related products

PS.ST

BB.DL.ML

HB.FB.A

PP.BL

OP.PS.AB

Our products are delivered from our factory in the Netherlands.

correspondence address

HeBlad - UK
The Balance, 7th floor, Pinfold Street
S1 2GU Sheffield, South Yorkshire
T. 0114 352 0110
info@HeBlad.co.uk
www.HeBlad.co.uk

head office address

Bottom plate Picnic table Natural Concrete

Product code: OP.PS

£ 1,725.00 excl. VAT
(£ 2,070.00 incl. VAT)

Especially for communities we have produced concrete bottom plates for our picnic tables.
We had many complaints that was difficult to mow the grass under the picnic tables. Also the pollution was not controllable.

The bottom plate is prepared for blind mounting to the picnic table. There are 6 different picnic tables suitable for this bottom plate.

Our products are delivered from our factory in the Netherlands.

Registred under: HeBlad BV • HM Revenue and Customs • Ruby House 8 • Ruby Place • AB10 1ZP Aberdeen
VAT Number GB381060225 • EORI Number GB381060225000 • Commercial register (NL) 170 66 364
Rabobank De Kempen, Markt 7, 5531 BA Bladel (NL) • BIC RABONL2U • Branch code RABONL2UXXX • IBAN NL 20 RABO 0107530112 GBP

correspondence address

HeBlad - UK
The Balance, 7th floor, Pinfold Street
S1 2GU Sheffield, South Yorkshire
T. 0114 352 0110
info@HeBlad.co.uk
www.HeBlad.co.uk

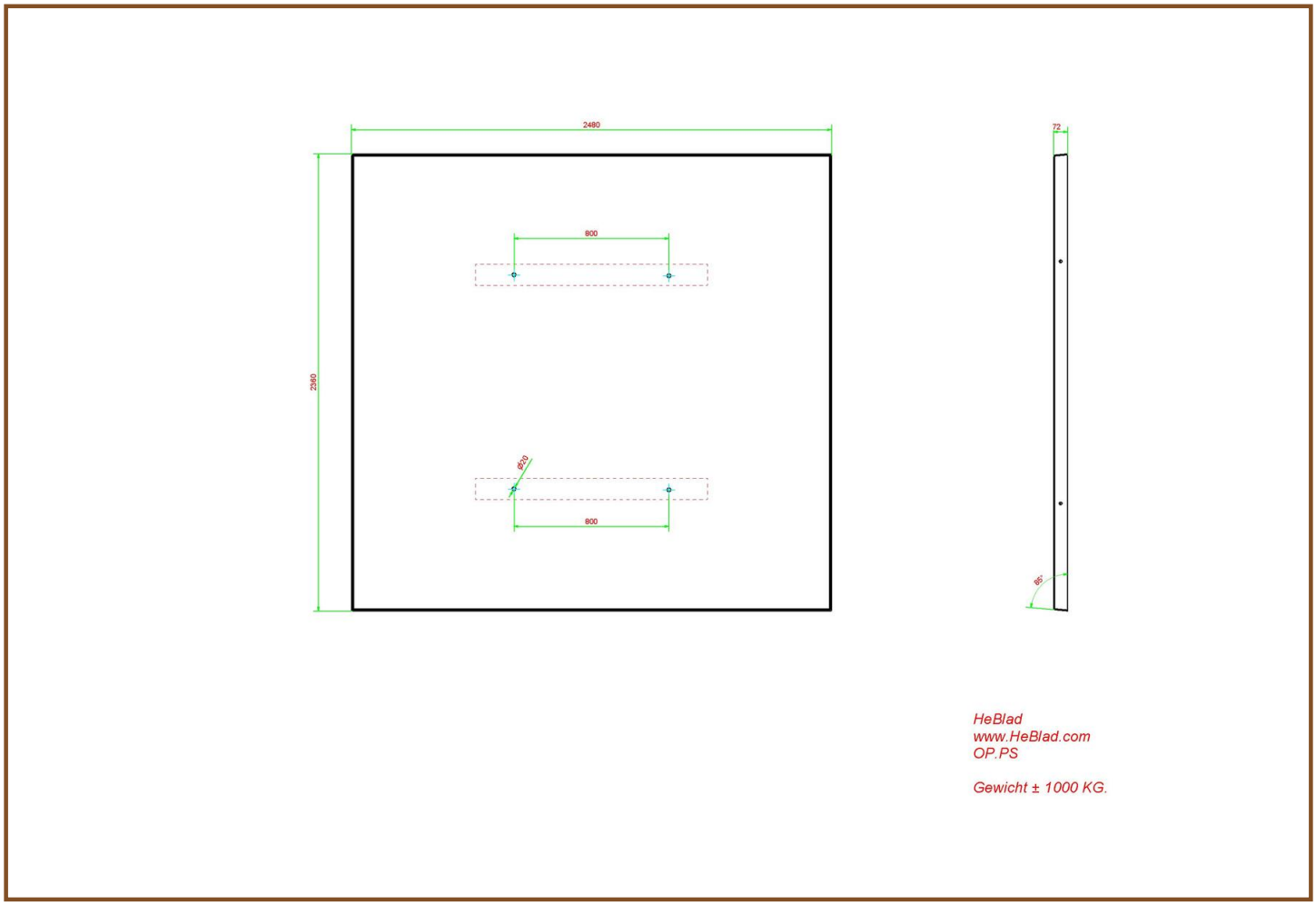

Specifications Bottom plate Picnic table Natural Concrete

Product code	OP.PS	Weight	1000 kg
Colour	Natural concrete	lifting device	Concrete screw sleeve M16
Dimensions (L x W x H)	248 x 236 x 7 cm	preparation attachment	Holes for bolts M16
Finishing base plate	Anti-slip (window) profile		

Related products

PS.DL

PS.ST

PS.DL.OV

OP.PS.AB

PS.ST.OV

Our products are delivered from our factory in the Netherlands.

correspondence address

HeBlad - UK
The Balance, 7th floor, Pinfold Street
S1 2GU Sheffield, South Yorkshire
T. 0114 352 0110
info@HeBlad.co.uk
www.HeBlad.co.uk

head office address

Bottom plate Picnic table Anthracite-Concrete

Product code: OP.PS.AB

£ 1,825.00 excl. VAT
(£ 2,190.00 incl. VAT)

This bottom plate is intended for the picnic tables DeLuxe and Standard in anthracite colour. By placing the picnic tables on to the bottom plate, grass can no longer grow under the tables and pollution cannot occur. Because the bottom plate is level with the grass, it is easy for a lawnmower to cut the grass and keep the surrounding tidy.

Our products are delivered from our factory in the Netherlands.

Registred under: HeBlad BV • HM Revenue and Customs • Ruby House 8 • Ruby Place • AB10 1ZP Aberdeen
VAT Number GB381060225 • EORI Number GB381060225000 • Commercial register (NL) 170 66 364
Rabobank De Kempen, Markt 7, 5531 BA Bladel (NL) • BIC RABONL2U • Branch code RABONL2UXXX • IBAN NL 20 RABO 0107530112 GBP

correspondence address

HeBlad - UK
The Balance, 7th floor, Pinfold Street
S1 2GU Sheffield, South Yorkshire
T. 0114 352 0110
info@HeBlad.co.uk
www.HeBlad.co.uk

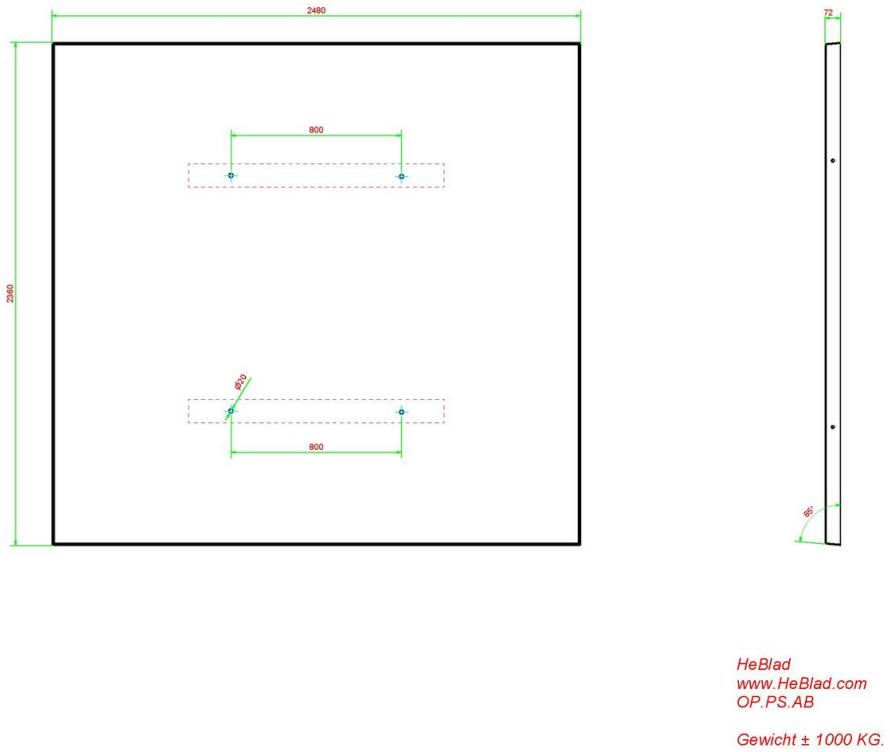

Specifications Bottom plate Picnic table Anthracite-Concrete

Product code	OP.PS.AB	Weight	1000 kg
Colour	Anthracite concrete	lifting device	Concrete screw sleeve M16
Dimensions (L x W x H)	248 x 236 x 7 cm	preparation attachment	Holes for bolts M16
Finishing base plate	Anti-slip (window) profile		

Related products

PS.DL.A

PS.ST.A

PS.DLAB.OV

OP.PS

PS.STAB.OV

Our products are delivered from our factory in the Netherlands.

correspondence address

HeBlad - UK
The Balance, 7th floor, Pinfold Street
S1 2GU Sheffield, South Yorkshire
T. 0114 352 0110
info@HeBlad.co.uk
www.HeBlad.co.uk

head office address

High Table Natural Concrete

Product code: HB.ST

£ 2,150.00 excl. VAT
(£ 2,580.00 incl. VAT)

This concrete standing table ideally placed on terraces of restaurants, hotels or pubs, it would also be a credit to a schoolyard or canteen of a sport club. Due to the heavy weight of the bottom plate the standing table is hardly to overturn. The bottom plate has the same measurements as the tabletop. The direct surrounding can easily be cleaned. The bottom plate is very comfortable to stand on, like at a bar.
You need to know, that the standing table cannot be moved with a pallet truck. The standing table can only be placed directly from the delivering truck onto the final destination. The crane can only bridge a distance of 5 meters.

Our products are delivered from our factory in the Netherlands.

12 October 2024 - Prices subject to change

correspondence address

HeBlad - UK
The Balance, 7th floor, Pinfold Street
S1 2GU Sheffield, South Yorkshire
T. 0114 352 0110
info@HeBlad.co.uk
www.HeBlad.co.uk

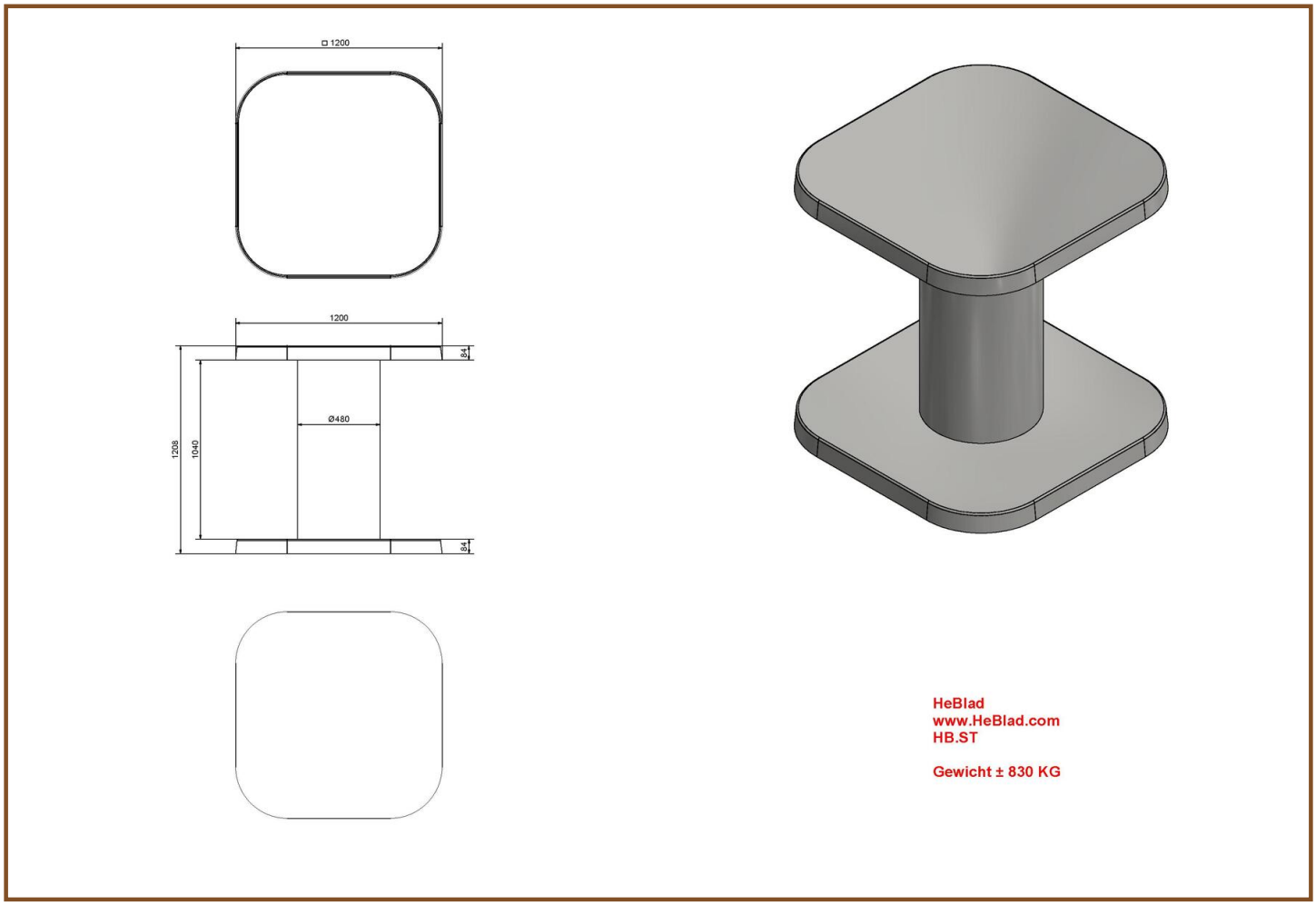

Specifications High Table Natural Concrete

Product code	HB.ST	Height tabletop	113 cm
Colour	Natural concrete	Tabletop thickness	8,5 cm
Dimensions (L x W x H)	120 x 120 x 113 cm	Weight	985 kg
Dimensions tabletop (L x W)	120 x 120 cm		

Related products

HB.ST.A

HB.ST.AB

Our products are delivered from our factory in the Netherlands.

correspondence address

HeBlad - UK
The Balance, 7th floor, Pinfold Street
S1 2GU Sheffield, South Yorkshire
T. 0114 352 0110
info@HeBlad.co.uk
www.HeBlad.co.uk

head office address

High Table Anthracite-Concrete

Product code: HB.ST.AB

£ 2,300.00 excl. VAT
(£ 2,760.00 incl. VAT)

Our products are delivered from our factory in the Netherlands.

12 October 2024 - Prices subject to change

correspondence address

HeBlad - UK
The Balance, 7th floor, Pinfold Street
S1 2GU Sheffield, South Yorkshire
T. 0114 352 0110
info@HeBlad.co.uk
www.HeBlad.co.uk

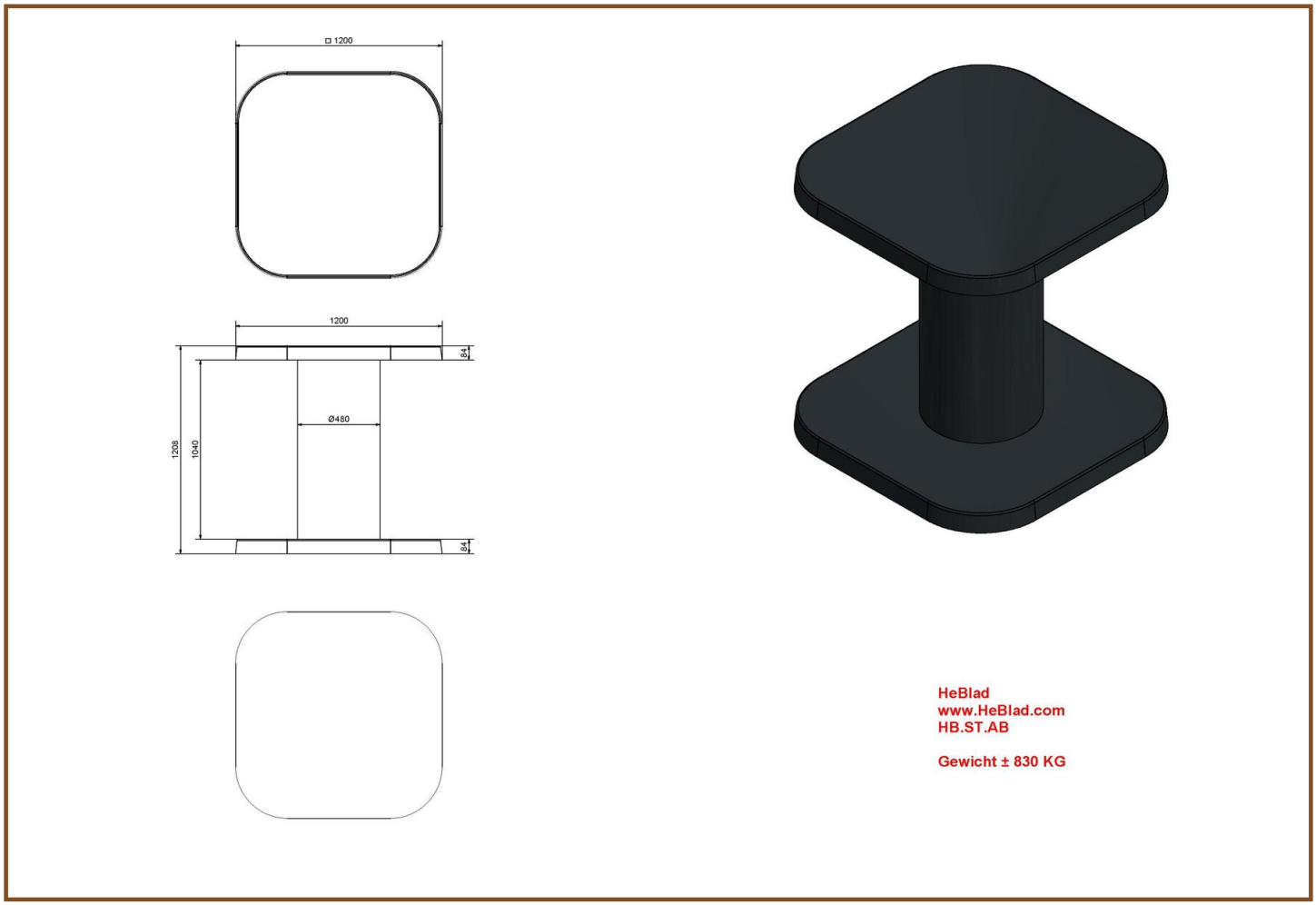

Specifications High Table Anthracite-Concrete

Product code	HB.ST.AB	Height tabletop	113 cm
Colour	Anthracite concrete	Tabletop thickness	8.4 cm
Dimensions (L x W x H)	120 x 120 x 113 cm	Weight	985 kg
Dimensions tabletop (L x W)	120 x 120 cm		

Related products

HB.ST.A

HB.ST

Our products are delivered from our factory in the Netherlands.

correspondence address

HeBlad - UK
The Balance, 7th floor, Pinfold Street
S1 2GU Sheffield, South Yorkshire
T. 0114 352 0110
info@HeBlad.co.uk
www.HeBlad.co.uk

head office address

Concrete High Table Anthracite

Product code: HB.ST.A

£ 2,250.00 excl. VAT
(£ 2,700.00 incl. VAT)

This concrete standing table looks chic because of the anthracite colour. This standing table is ideal on a terrace of a hotel, restaurant, café, pub or snack bar, but also a plus on schoolyard or sports hall. The table can be cleaned very easily and is almost vandal resistant. By the weight and form of a reel this table is almost impossible to overturn. The bottom plate invites to stand on while “hanging“ at the table.
We cannot transport or move the standing table with a pallet truck, therefore the final destination must be reachable for our delivery vehicle or in a distance of 5 meters for the crane to put the table in place.

Our products are delivered from our factory in the Netherlands.

12 October 2024 - Prices subject to change

correspondence address

HeBlad - UK
The Balance, 7th floor, Pinfold Street
S1 2GU Sheffield, South Yorkshire
T. 0114 352 0110
info@HeBlad.co.uk
www.HeBlad.co.uk

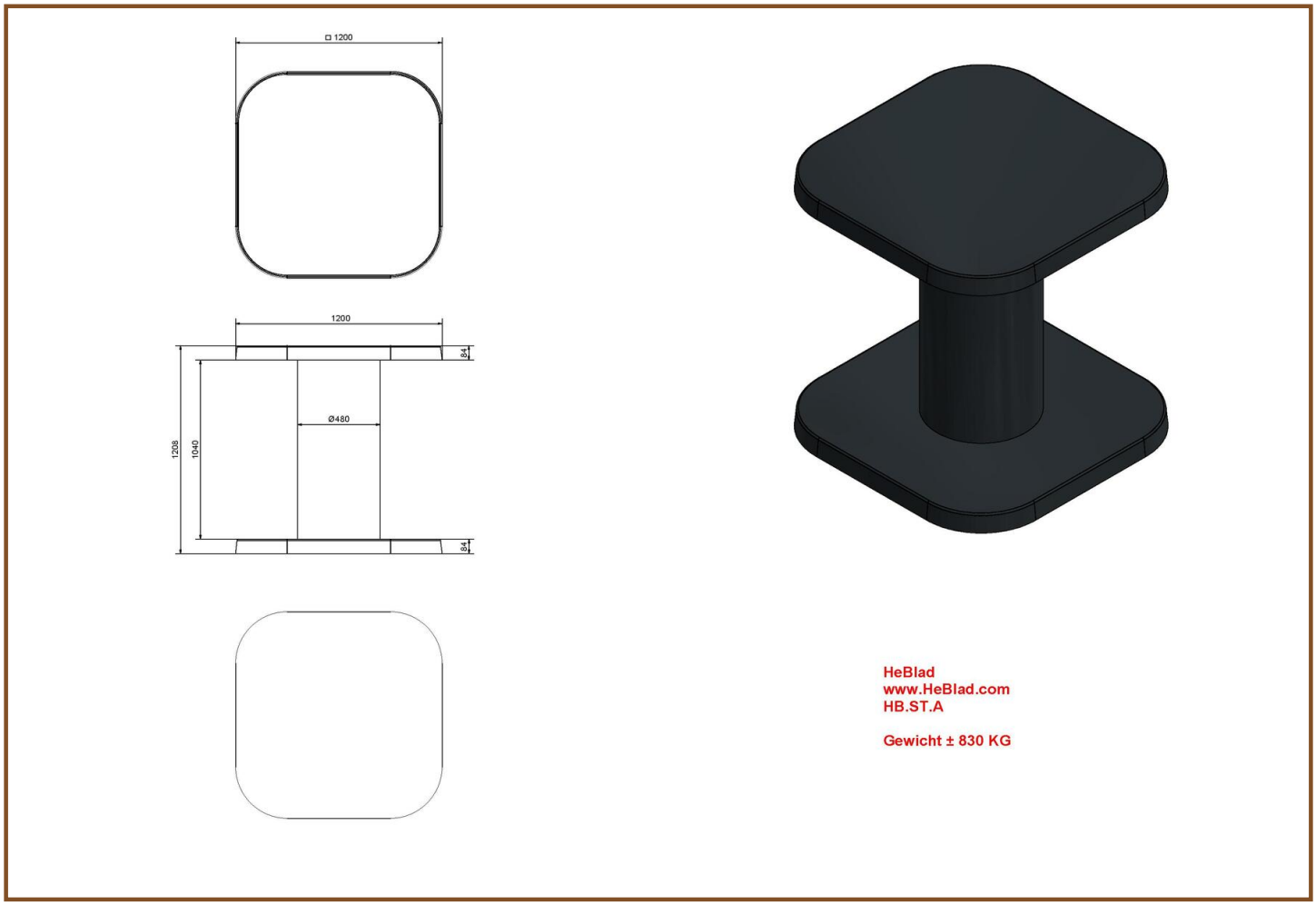

Specifications Concrete High Table Anthracite

Product code	HB.ST.A	Height tabletop	113 cm
Colour	Anthracite lacquered, RAL 7016	Tabletop thickness	8.4 cm
Dimensions (L x W x H)	120 x 120 x 113 cm	Weight	985 kg
Dimensions tabletop (L x W)	120 x 120 cm		

Related products

HB.ST.AB

HB.ST

Our products are delivered from our factory in the Netherlands.

correspondence address

HeBlad - UK
The Balance, 7th floor, Pinfold Street
S1 2GU Sheffield, South Yorkshire
T. 0114 352 0110
info@HeBlad.co.uk
www.HeBlad.co.uk

head office address

Bench natural concrete oval

Product code: BB.ST.OV

£ 1,700.00 excl. VAT
(£ 2,040.00 incl. VAT)

A bench in a beautiful oval design. This bench is suitable for creating a playful partition. Winding over the schoolyard or in an arrangement around a sandpit.This solid bench is made of high-quality C45/55 concrete with high compressive strength. This bench is virtually indestructible!

Our products are delivered from our factory in the Netherlands.

Registred under: HeBlad BV • HM Revenue and Customs • Ruby House 8 • Ruby Place • AB10 1ZP Aberdeen
VAT Number GB381060225 • EORI Number GB381060225000 • Commercial register (NL) 170 66 364
Rabobank De Kempen, Markt 7, 5531 BA Bladel (NL) • BIC RABONL2U • Branch code RABONL2UXXX • IBAN NL 20 RABO 0107530112 GBP

correspondence address

HeBlad - UK
The Balance, 7th floor, Pinfold Street
S1 2GU Sheffield, South Yorkshire
T. 0114 352 0110
info@HeBlad.co.uk
www.HeBlad.co.uk

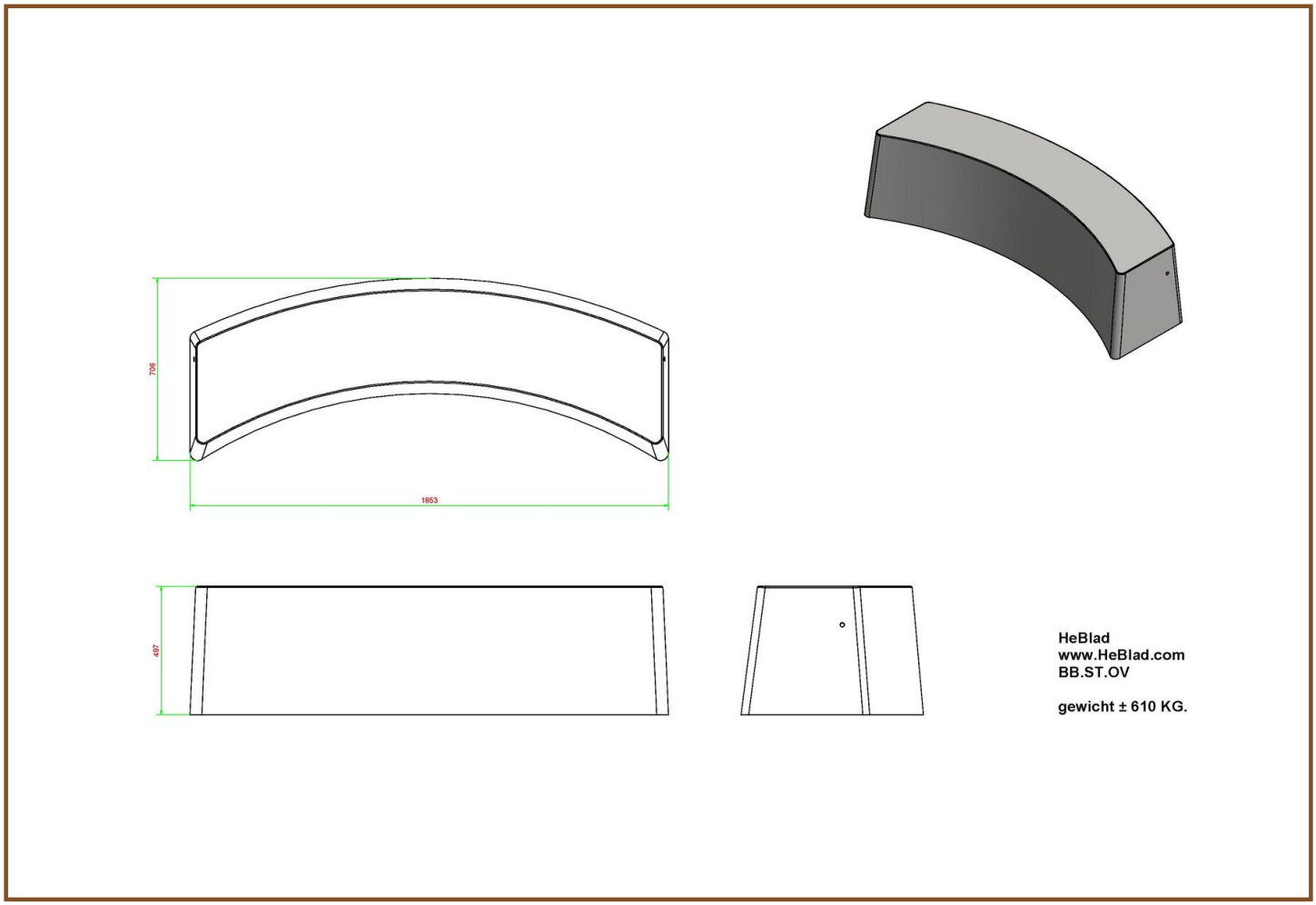

Specifications Bench natural concrete oval

Product code	BB.ST.OV	Material seat	Beton
Colour	Natural concrete	Number of seats	4
Dimensions (L x W x H)	185 x 70 x 50 cm	Weight	900 kg
Seat height	50 cm		

Related products

BB.STAB.OV

PS.ST.OV

BB.ST

BB.ST.A

BB.ST.AB

Our products are delivered from our factory in the Netherlands.

correspondence address

HeBlad - UK
The Balance, 7th floor, Pinfold Street
S1 2GU Sheffield, South Yorkshire
T. 0114 352 0110
info@HeBlad.co.uk
www.HeBlad.co.uk

head office address

Bench standard oval anthracite-concrete

Product code: BB.STAB.OV

£ 1,775.00 excl. VAT
(£ 2,130.00 incl. VAT)

With the beautiful anthracite-coloured concrete bench, a seat or seating group can be created quickly and easily anywhere. This concrete bench is not lacquered, but cast in coloured concrete, which gives the bench this colour through-and-through. Because of its weight, it can also be used very well as a partition.

Our products are delivered from our factory in the Netherlands.

Registred under: HeBlad BV • HM Revenue and Customs • Ruby House 8 • Ruby Place • AB10 1ZP Aberdeen
VAT Number GB381060225 • EORI Number GB381060225000 • Commercial register (NL) 170 66 364
Rabobank De Kempen, Markt 7, 5531 BA Bladel (NL) • BIC RABONL2U • Branch code RABONL2UXXX • IBAN NL 20 RABO 0107530112 GBP

correspondence address

HeBlad - UK
The Balance, 7th floor, Pinfold Street
S1 2GU Sheffield, South Yorkshire
T. 0114 352 0110
info@HeBlad.co.uk
www.HeBlad.co.uk

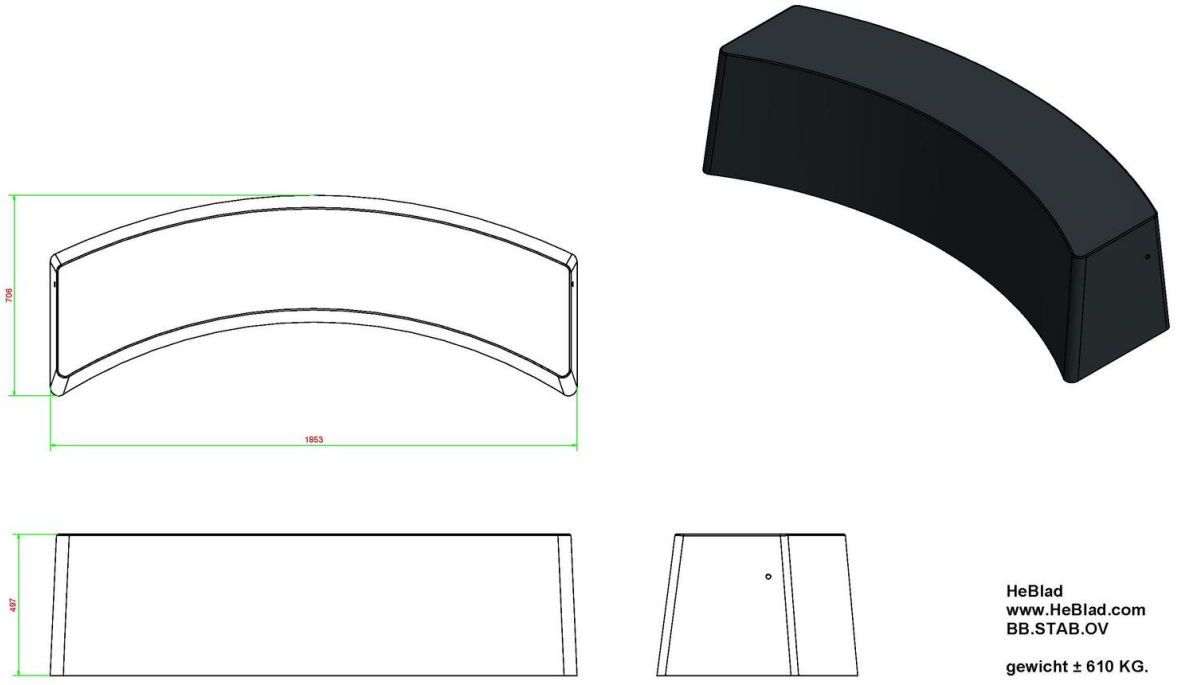

Specifications Bench standard oval anthracite-concrete

Product code	BB.STAB.OV	Material seat	Beton
Colour	Anthracite concrete	Number of seats	4
Dimensions (L x W x H)	185 x 70 x 50 cm	Weight	900 kg
Seat height	50 cm		

Related products

BB.DLA.OV

PS.ST.OV

BB.ST

BB.ST.A

BB.ST.AB

Our products are delivered from our factory in the Netherlands.

correspondence address

HeBlad - UK
The Balance, 7th floor, Pinfold Street
S1 2GU Sheffield, South Yorkshire
T. 0114 352 0110
info@HeBlad.co.uk
www.HeBlad.co.uk

head office address

Bench standard oval anthracite

Product code: BB.STA.OV

£ 1,850.00 excl. VAT
(£ 2,220.00 incl. VAT)

In addition to its function as a partition, this concrete bench can also be used as a seat. Because the bench does not need to be anchored to the ground, it is ready for use immediately upon delivery. The anthracite colour (spray-painted in high-quality lacquer) gives the concrete bench a warmer appearance. Extremely suitable for use as a boundary/partition on a schoolyard. The shape makes it possible to create many playful arrangements.

Our products are delivered from our factory in the Netherlands.

12 October 2024 - Prices subject to change

correspondence address

HeBlad - UK
The Balance, 7th floor, Pinfold Street
S1 2GU Sheffield, South Yorkshire
T. 0114 352 0110
info@HeBlad.co.uk
www.HeBlad.co.uk

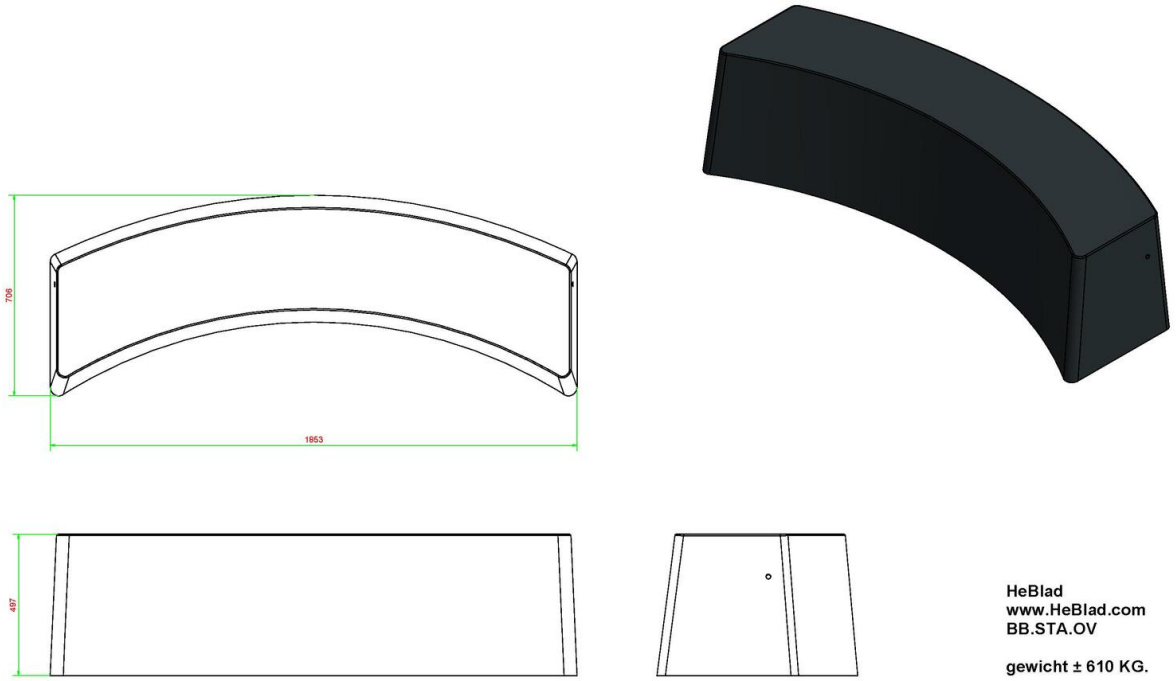

Specifications Bench standard oval anthracite

Product code	BB.STA.OV	Material seat	Beton
Colour	Anthracite	Number of seats	4
Dimensions (L x W x H)	185 x 70 x 50 cm	Weight	900 kg
Seat height	50 cm		

Related products

BB.STA.OV

PS.DLA.OV

BB.DL.OV

BB.ST.A

BB.DL.AB

Our products are delivered from our factory in the Netherlands.

correspondence address

HeBlad - UK
The Balance, 7th floor, Pinfold Street
S1 2GU Sheffield, South Yorkshire
T. 0114 352 0110
info@HeBlad.co.uk
www.HeBlad.co.uk

head office address

Bench DeLuxe Oval Natural Concrete

Product code: BB.DL.OV

£ 1,875.00 excl. VAT
(£ 2,250.00 incl. VAT)

A bench elegantly formed in an oval shape is extremely suitable for creating a playful separation, such as a winding line across a schoolyard or in a setting around a sandpit
This bench is made of natural concrete and provided with high quality bamboo planks for comfortable seating.

Our products are delivered from our factory in the Netherlands.

12 October 2024 - Prices subject to change

correspondence address

HeBlad - UK
The Balance, 7th floor, Pinfold Street
S1 2GU Sheffield, South Yorkshire
T. 0114 352 0110
info@HeBlad.co.uk
www.HeBlad.co.uk

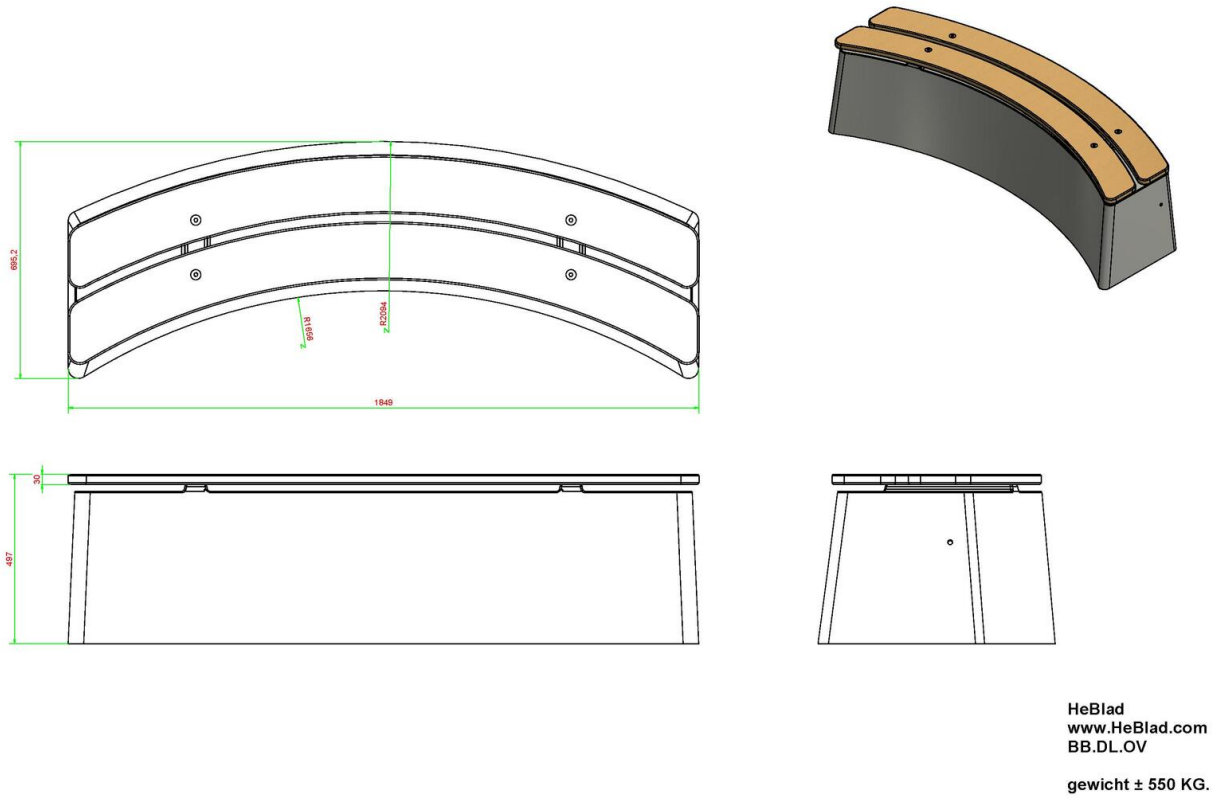

Specifications Bench DeLuxe Oval Natural Concrete

Product code	BB.DL.OV	Material seat	Bamboo
Colour	Natural concrete	Number of seats	4
Dimensions (L x W x H)	185 x 70 x 50 cm	Weight	825 kg
Seat height	50 cm		

Related products

BB.DLAB.OV

BB.DL

PS.DL.OV

PS.ST.XL

BB.PB.OP

Our products are delivered from our factory in the Netherlands.

correspondence address

HeBlad - UK
The Balance, 7th floor, Pinfold Street
S1 2GU Sheffield, South Yorkshire
T. 0114 352 0110
info@HeBlad.co.uk
www.HeBlad.co.uk

head office address

Bench DeLuxe Oval Anthracite-Concrete

Product code: BB.DLAB.OV

£ 2,025.00 excl. VAT
(£ 2,430.00 incl. VAT)

With this beautiful bench in anthracite-colour, you can arrange a schoolyard in a playful manner.
This bench can be placed in a winding form over the schoolyard or around a tree as a tree bench. Looking at the reference pictures of this model you surely get more ideas.
This concrete bench is not lacquered or painted, but moulded anthracite-coloured concrete, whereupon the bench has this colour through and through.
The heavy weight makes it possible to use the bench as a separation.

Our products are delivered from our factory in the Netherlands.

Registred under: HeBlad BV • HM Revenue and Customs • Ruby House 8 • Ruby Place • AB10 1ZP Aberdeen
VAT Number GB381060225 • EORI Number GB381060225000 • Commercial register (NL) 170 66 364
Rabobank De Kempen, Markt 7, 5531 BA Bladel (NL) • BIC RABONL2U • Branch code RABONL2UXXX • IBAN NL 20 RABO 0107530112 GBP

correspondence address

HeBlad - UK
The Balance, 7th floor, Pinfold Street
S1 2GU Sheffield, South Yorkshire
T. 0114 352 0110
info@HeBlad.co.uk
www.HeBlad.co.uk

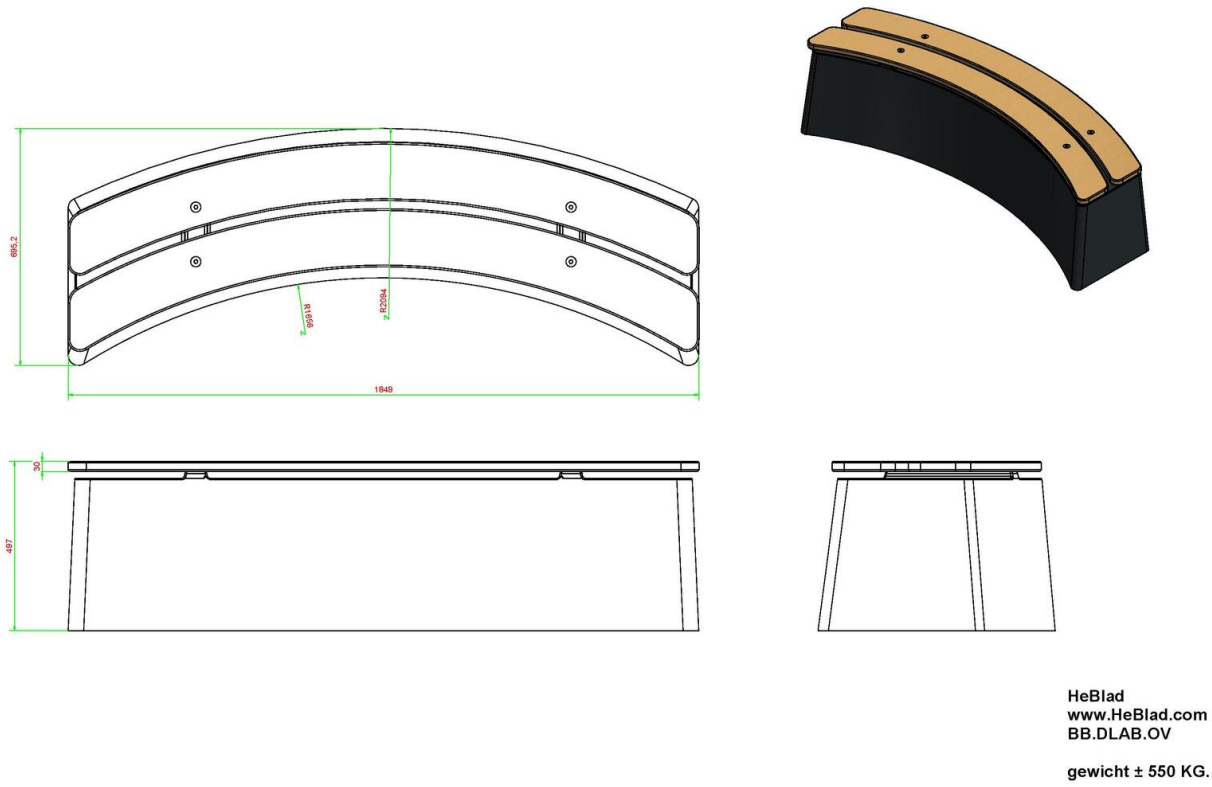

Specifications Bench DeLuxe Oval Anthracite-Concrete

Product code	BB.DLAB.OV	Material seat	Bamboo
Colour	Anthracite concrete	Number of seats	4
Dimensions (L x W x H)	185 x 70 x 50 cm	Weight	825 kg
Seat height	50 cm		

Related products

BB.DL.OV

BB.DLA.OV

BB.PB.OP

BB.DL.AB

BB.ST.AB

Our products are delivered from our factory in the Netherlands.

correspondence address

HeBlad - UK
The Balance, 7th floor, Pinfold Street
S1 2GU Sheffield, South Yorkshire
T. 0114 352 0110
info@HeBlad.co.uk
www.HeBlad.co.uk

head office address

Concrete Bench DeLuxe Oval Anthracite

Product code: BB.DLA.OV

£ 1,950.00 excl. VAT
(£ 2,340.00 incl. VAT)

Our beautiful oval bench has a warm appearance through the anthracite finish. The bamboo planks are secured through “blind” mounting, thus they are not easy to take apart. Beautiful and practical at the same time! The shape invites you to create playful settings.

Our products are delivered from our factory in the Netherlands.

Registred under: HeBlad BV • HM Revenue and Customs • Ruby House 8 • Ruby Place • AB10 1ZP Aberdeen
VAT Number GB381060225 • EORI Number GB381060225000 • Commercial register (NL) 170 66 364
Rabobank De Kempen, Markt 7, 5531 BA Bladel (NL) • BIC RABONL2U • Branch code RABONL2UXXX • IBAN NL 20 RABO 0107530112 GBP

correspondence address

HeBlad - UK
The Balance, 7th floor, Pinfold Street
S1 2GU Sheffield, South Yorkshire
T. 0114 352 0110
info@HeBlad.co.uk
www.HeBlad.co.uk

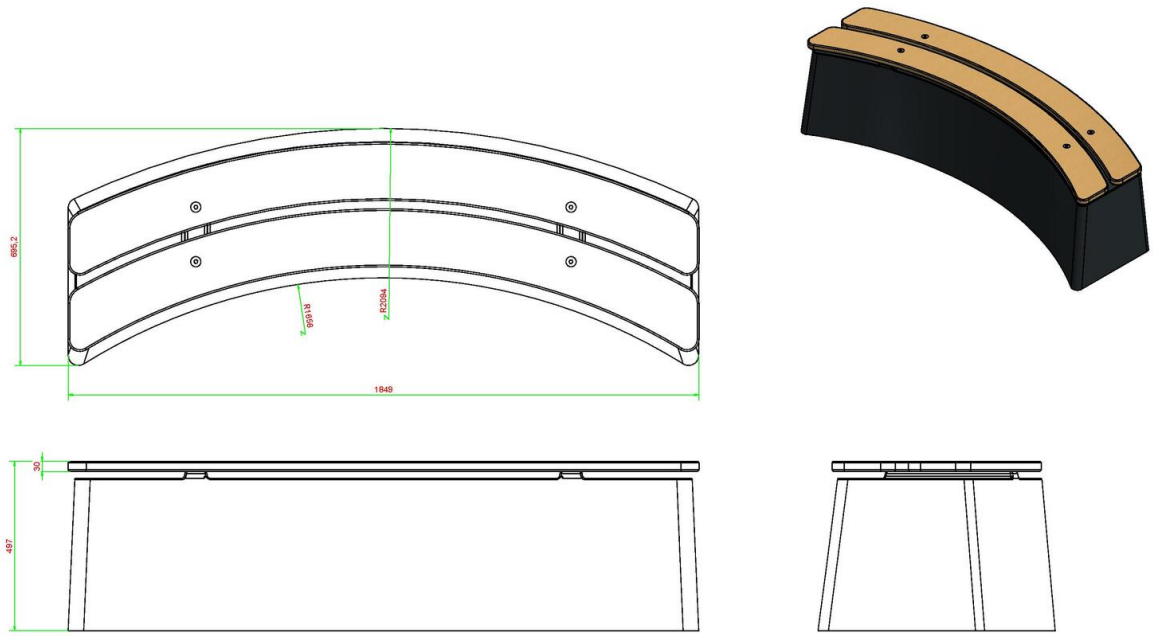

HeBlad
www.HeBlad.com
BB.DLA.OV

gewicht ± 550 KG.

Specifications Concrete Bench DeLuxe Oval Anthracite

Product code	BB.DLA.OV	Material seat	Bamboo
Colour	Anthracite lacquered, RAL 7016	Number of seats	4
Dimensions (L x W x H)	185 x 70 x 50 cm	Weight	825 kg
Seat height	50 cm		

Related products

BB.DL.A

PS.STA.OV

PP.AR.BL

HB.FB.A

GT.CK.G4

Our products are delivered from our factory in the Netherlands.

correspondence address

HeBlad - UK
The Balance, 7th floor, Pinfold Street
S1 2GU Sheffield, South Yorkshire
T. 0114 352 0110
info@HeBlad.co.uk
www.HeBlad.co.uk

head office address

Bench Standard Natural Concrete

Product code: BB.ST

£ 1,600.00 excl. VAT
(£ 1,920.00 incl. VAT)

Ideal to combine with a ping-pong table or a picnic table. Also very suitable to use as a barrier. We have customers who use these benches to protect their property against ram raids. This massive bench is made of high quality C45/55 concrete with high pressure density. This bench is practically indestructible!

Our products are delivered from our factory in the Netherlands.

13 October 2024 - Prices subject to change

correspondence address

HeBlad - UK
The Balance, 7th floor, Pinfold Street
S1 2GU Sheffield, South Yorkshire
T. 0114 352 0110
info@HeBlad.co.uk
www.HeBlad.co.uk

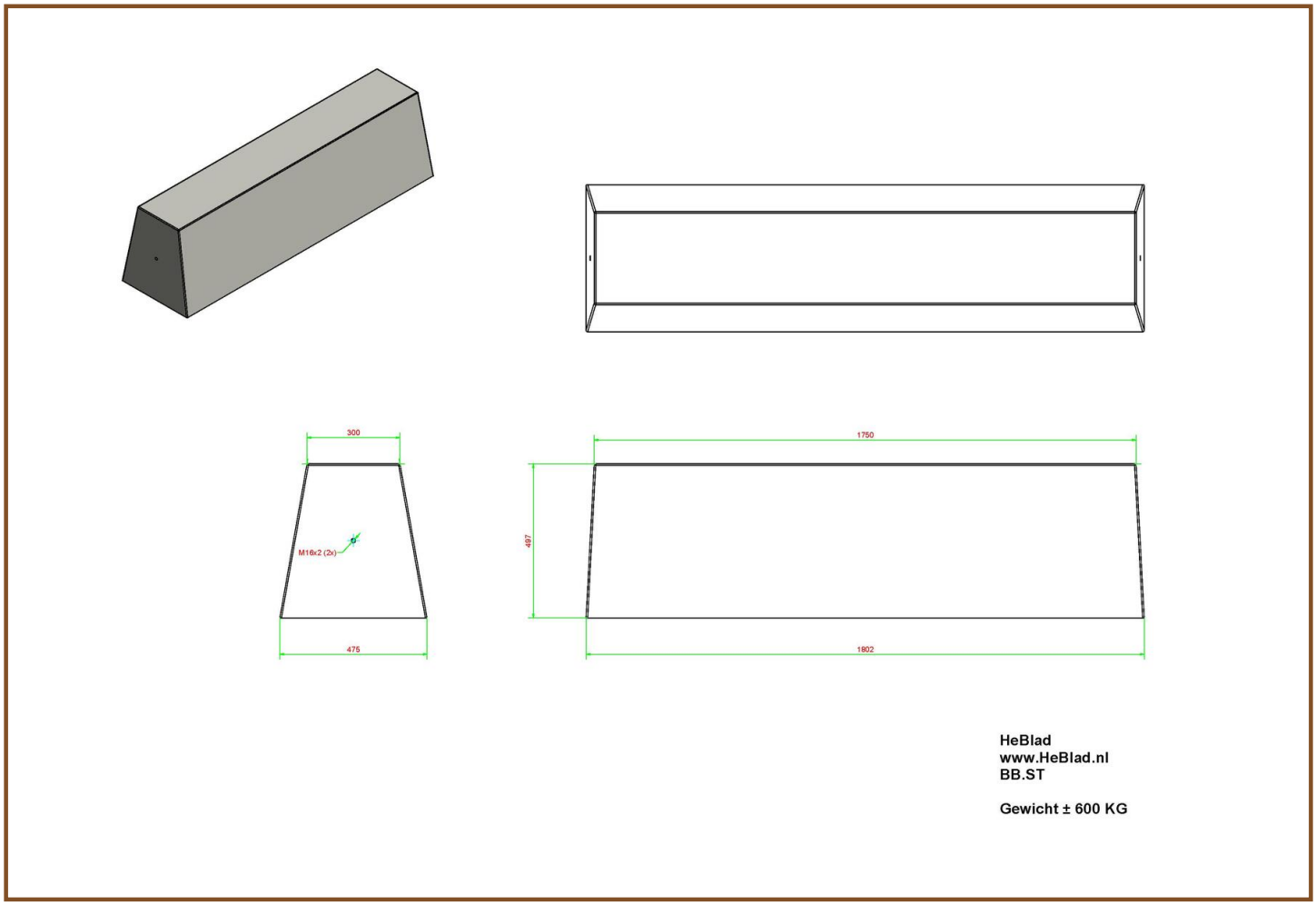

Specifications Bench Standard Natural Concrete

Product code	BB.ST	Seat height	47,5 cm
Colour	Natural concrete	Material seat	Beton
Dimensions (L x W x H)	180 x 50 x 47,5 cm	Number of seats	4
Dimensions seat	175 x 30 cm	Weight	800 kg

Related products

BB.DL.OV

PS.ST

PP.AR.BL

HB.FB.A

OP.BB

Our products are delivered from our factory in the Netherlands.

correspondence address

HeBlad - UK
The Balance, 7th floor, Pinfold Street
S1 2GU Sheffield, South Yorkshire
T. 0114 352 0110
info@HeBlad.co.uk
www.HeBlad.co.uk

head office address

Bench Standard Anthracite-Concrete

Product code: BB.ST.AB

£ 1,650.00 excl. VAT
(£ 1,980.00 incl. VAT)

With this exquisite anthracite-coloured concrete bench you can easily create seatings or seat corners.
This concrete bench is not lacquered but is made of coloured concrete, with the result that the bench is coloured through and through.
Due to its weight this bench is perfect for using a separation.

Our products are delivered from our factory in the Netherlands.

Registred under: HeBlad BV • HM Revenue and Customs • Ruby House 8 • Ruby Place • AB10 1ZP Aberdeen
VAT Number GB381060225 • EORI Number GB381060225000 • Commercial register (NL) 170 66 364
Rabobank De Kempen, Markt 7, 5531 BA Bladel (NL) • BIC RABONL2U • Branch code RABONL2UXXX • IBAN NL 20 RABO 0107530112 GBP

correspondence address

HeBlad - UK
The Balance, 7th floor, Pinfold Street
S1 2GU Sheffield, South Yorkshire
T. 0114 352 0110
info@HeBlad.co.uk
www.HeBlad.co.uk

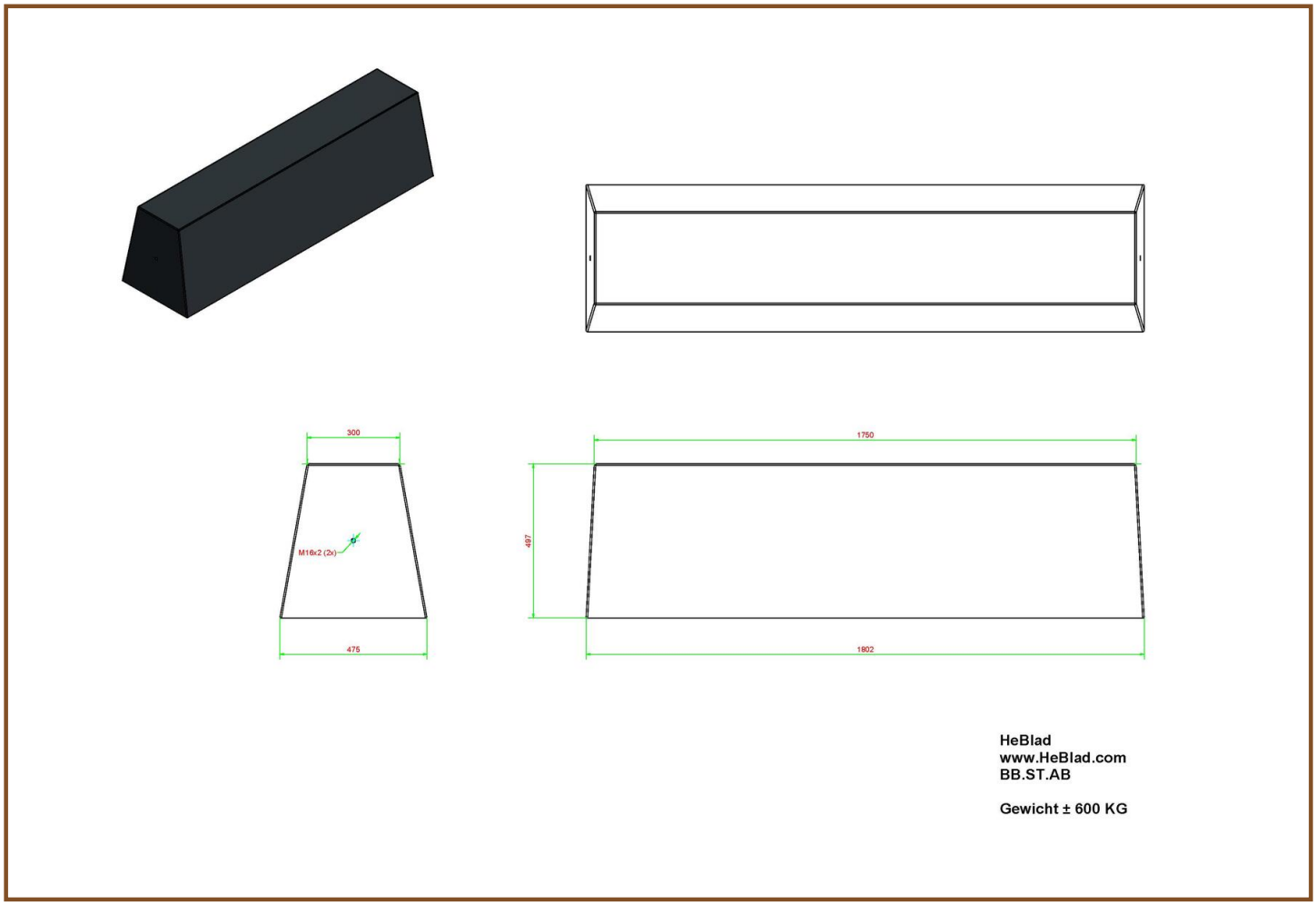

Specifications Bench Standard Anthracite-Concrete

Product code	BB.ST.AB	Seat height	50 cm
Colour	Anthracite concrete	Material seat	Beton
Dimensions (L x W x H)	180 x 47,5 x 50 cm	Number of seats	4
Dimensions seat	175 x 30 cm	Weight	800 kg

Our products are delivered from our factory in the Netherlands.

correspondence address

HeBlad - UK
The Balance, 7th floor, Pinfold Street
S1 2GU Sheffield, South Yorkshire
T. 0114 352 0110
info@HeBlad.co.uk
www.HeBlad.co.uk

head office address

Concrete Bench Standard Anthracite

Product code: BB.ST.A

£ 1,700.00 excl. VAT
(£ 2,040.00 incl. VAT)

The simplicity of this bench gives the an easy possibility to create a seat. Because our benches don't have to be fixed to the ground, the bench is ready to use after placing.

The anthracite colouring gives the bench a warm appearance. Particularly useful for a separation or temporary closure.

Our products are delivered from our factory in the Netherlands.

Registred under: HeBlad BV • HM Revenue and Customs • Ruby House 8 • Ruby Place • AB10 1ZP Aberdeen
VAT Number GB381060225 • EORI Number GB381060225000 • Commercial register (NL) 170 66 364
Rabobank De Kempen, Markt 7, 5531 BA Bladel (NL) • BIC RABONL2U • Branch code RABONL2UXXX • IBAN NL 20 RABO 0107530112 GBP

correspondence address

HeBlad - UK
The Balance, 7th floor, Pinfold Street
S1 2GU Sheffield, South Yorkshire
T. 0114 352 0110
info@HeBlad.co.uk
www.HeBlad.co.uk

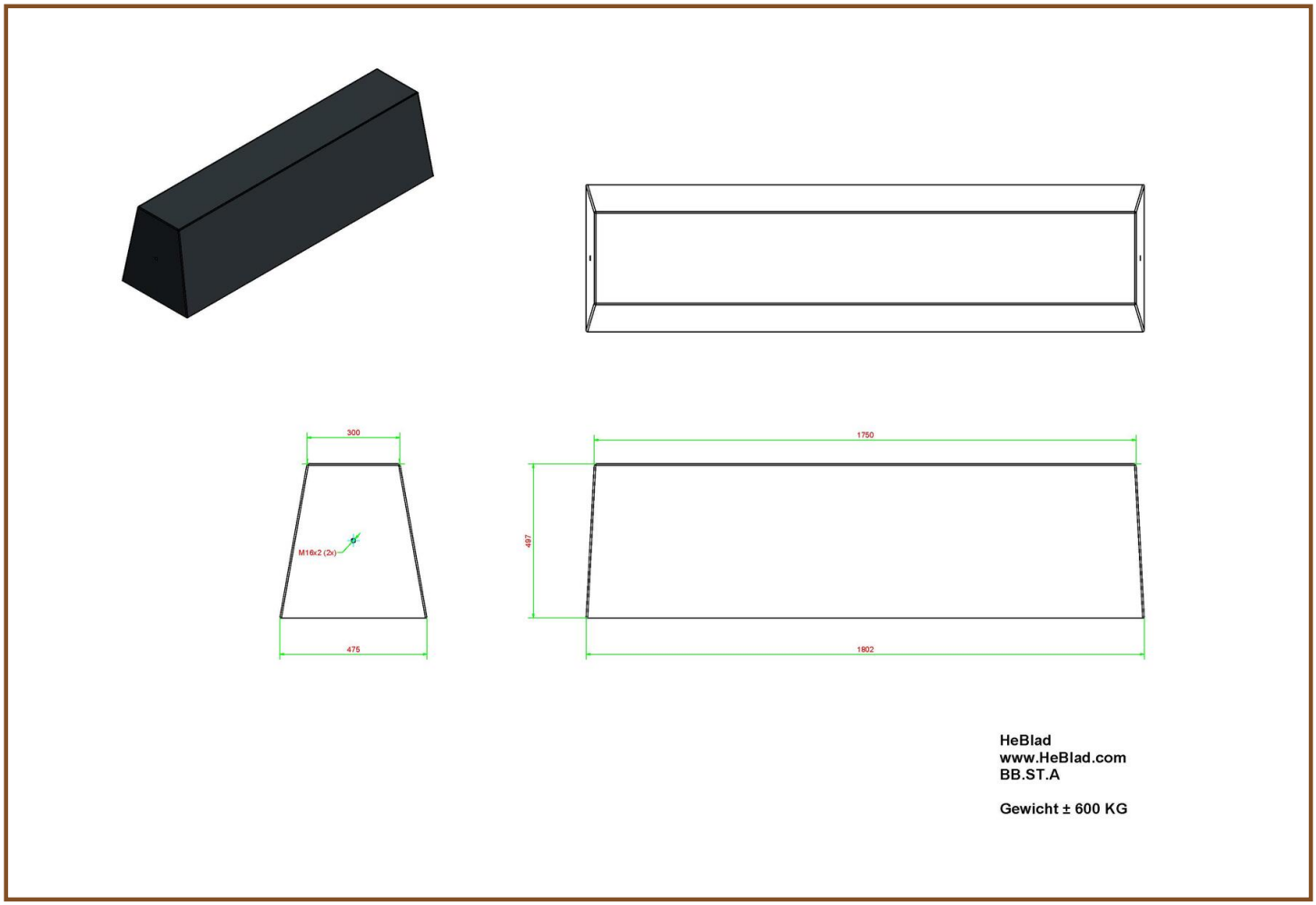

Specifications Concrete Bench Standard Anthracite

Product code	BB.ST.A	Seat height	50 cm
Colour	Anthracite lacquered, RAL 7016	Material seat	Beton
Dimensions (L x W x H)	180 x 47,5 x 50 cm	Number of seats	4
Dimensions seat	175 x 30 cm	Weight	800 kg

Related products

BB.DL.A

PS.ST.A

PP.AR.GR

HB.FB.A

OP.BB

Our products are delivered from our factory in the Netherlands.

correspondence address

HeBlad - UK
The Balance, 7th floor, Pinfold Street
S1 2GU Sheffield, South Yorkshire
T. 0114 352 0110
info@HeBlad.co.uk
www.HeBlad.co.uk

head office address

Bench DeLuxe Natural Concrete

Product code: BB.DL

£ 1,725.00 excl. VAT
(£ 2,070.00 incl. VAT)

This sound bench is made of high quality C45/55 concrete and is embellished with bamboo seatings . On these planks you can sit warmly and comfortably. These benches are also ideal to combine with a ping-pong table or picnic table in order to create more seats.

By placing these benches in shopping streets between pavement and street you can create a safety zone for pedestrians, there will be always enough seats and don't underestimate the protection against ram raids.

Our products are delivered from our factory in the Netherlands.

Registred under: HeBlad BV • HM Revenue and Customs • Ruby House 8 • Ruby Place • AB10 1ZP Aberdeen
VAT Number GB381060225 • EORI Number GB381060225000 • Commercial register (NL) 170 66 364
Rabobank De Kempen, Markt 7, 5531 BA Bladel (NL) • BIC RABONL2U • Branch code RABONL2UXXX • IBAN NL 20 RABO 0107530112 GBP

correspondence address

HeBlad - UK
The Balance, 7th floor, Pinfold Street
S1 2GU Sheffield, South Yorkshire
T. 0114 352 0110
info@HeBlad.co.uk
www.HeBlad.co.uk

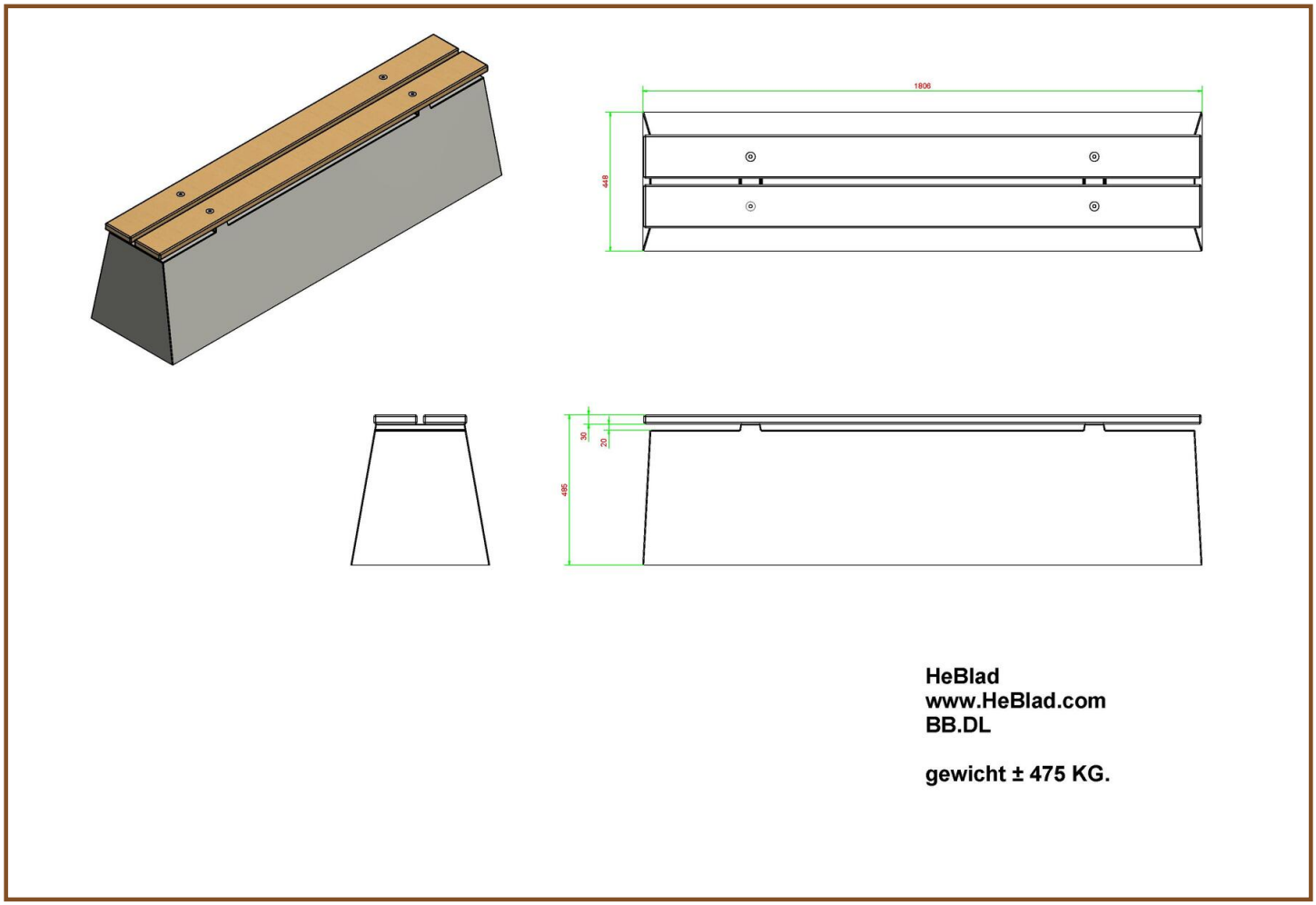

Specifications Bench DeLuxe Natural Concrete

Product code	BB.DL	Seat height	50 cm
Colour	Natural concrete	Material seat	Bamboo
Dimensions (L x W x H)	180 x 45 x 50 cm	Number of seats	4
Dimensions seat	180 x 30 cm	Weight	700 kg

Related products

BB.DL.ML

PS.DL

PP.R.BL

HB.FB.A

OP.BB

Our products are delivered from our factory in the Netherlands.

correspondence address

HeBlad - UK
The Balance, 7th floor, Pinfold Street
S1 2GU Sheffield, South Yorkshire
T. 0114 352 0110
info@HeBlad.co.uk
www.HeBlad.co.uk

head office address

Bench DeLuxe Anthracite-Concrete

Product code: BB.DL.AB

£ 1,775.00 excl. VAT
(£ 2,130.00 incl. VAT)

Concrete anthracite-coloured bench. As this bench is not lacquered, but entirely consists of anthracite-concrete this “Concrete look” is a feast for the eye.
Ideal in public places. The seatings are of bamboo. Strong, solid and durable.

Our products are delivered from our factory in the Netherlands.

12 October 2024 - Prices subject to change

correspondence address

HeBlad - UK
The Balance, 7th floor, Pinfold Street
S1 2GU Sheffield, South Yorkshire
T. 0114 352 0110
info@HeBlad.co.uk
www.HeBlad.co.uk

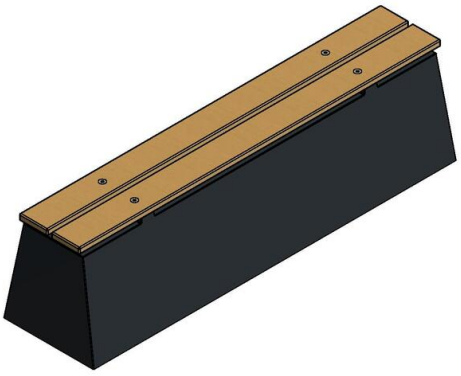

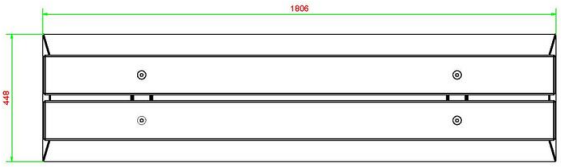

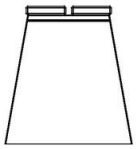

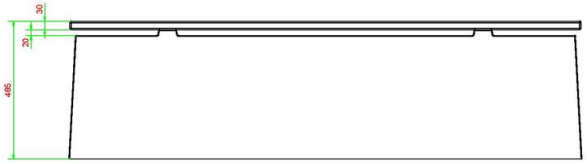

HeBlad
www.HeBlad.com
BB.DL.AB

gewicht ± 475 KG.

Specifications Bench DeLuxe Anthracite-Concrete

Product code	BB.DL.AB	Seat height	50 cm
Colour	Anthracite concrete	Material seat	Bamboo
Dimensions (L x W x H)	180 x 45 x 50 cm	Number of seats	4
Dimensions seat	180 x 30 cm	Weight	700 kg

Related products

BB.DL

BB.DL.A

BB.DLAB.ML

BB.ST.AB

BB.PB.OP

Our products are delivered from our factory in the Netherlands.

Registred under: HeBlad BV • HM Revenue and Customs • Ruby House 8 • Ruby Place • AB10 1ZP Aberdeen
VAT Number GB381060225 • EORI Number GB381060225000 • Commercial register (NL) 170 66 364
Rabobank De Kempen, Markt 7, 5531 BA Bladel (NL) • BIC RABONL2U • Branch code RABONL2UXXX • IBAN NL 20 RABO 0107530112 GBP

correspondence address

HeBlad - UK
The Balance, 7th floor, Pinfold Street
S1 2GU Sheffield, South Yorkshire
T. 0114 352 0110
info@HeBlad.co.uk
www.HeBlad.co.uk

head office address

Concrete Bench DeLuxe Anthracite

Product code: BB.DL.A

£ 1,825.00 excl. VAT
(£ 2,190.00 incl. VAT)

This bench really is made of concrete although it does not seem to be so, because of the beautiful anthracite lacquer colour.

Ideal on schoolyards, near swimming pools or as a separation. Nicely finished with bamboo planks of high quality, these are blind secured, thus not easy to take apart.

Our products are delivered from our factory in the Netherlands.

Registred under: HeBlad BV • HM Revenue and Customs • Ruby House 8 • Ruby Place • AB10 1ZP Aberdeen
VAT Number GB381060225 • EORI Number GB381060225000 • Commercial register (NL) 170 66 364
Rabobank De Kempen, Markt 7, 5531 BA Bladel (NL) • BIC RABONL2U • Branch code RABONL2UXXX • IBAN NL 20 RABO 0107530112 GBP

correspondence address

HeBlad - UK
The Balance, 7th floor, Pinfold Street
S1 2GU Sheffield, South Yorkshire
T. 0114 352 0110
info@HeBlad.co.uk
www.HeBlad.co.uk

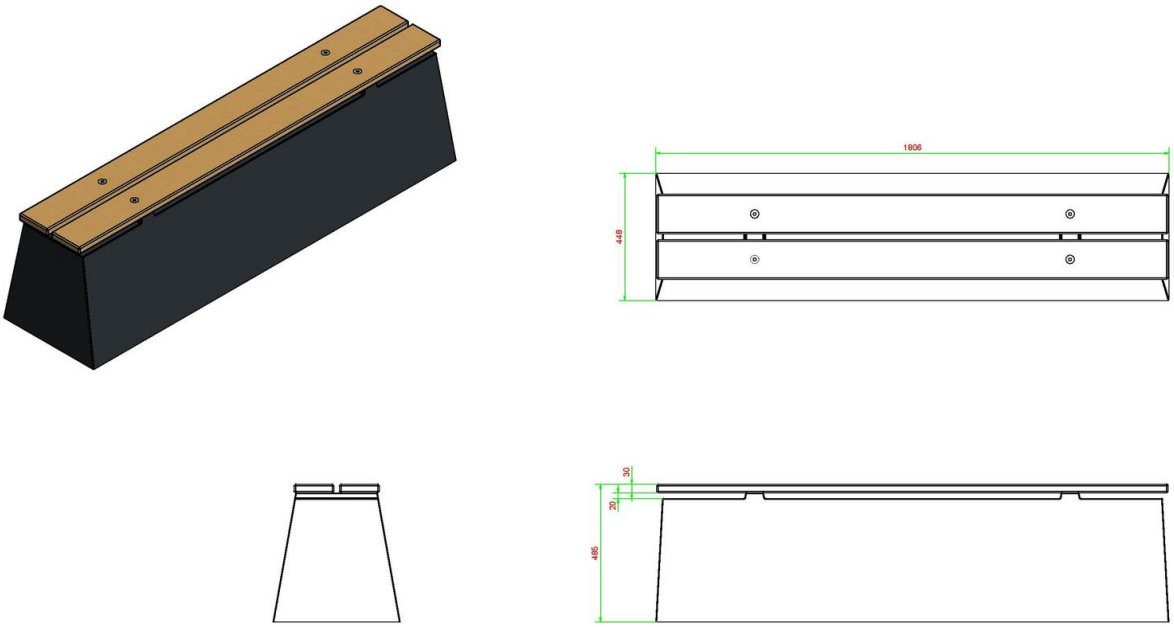

HeBlad
www.HeBlad.com
BB.DL.A

gewicht ± 475 KG.

Specifications Concrete Bench DeLuxe Anthracite

Product code	BB.DL.A	Seat height	50 cm
Colour	Anthracite lacquered, RAL 7016	Material seat	Bamboo
Dimensions (L x W x H)	180 x 45 x 50 cm	Number of seats	4
Dimensions seat	180 x 30 cm	Weight	700 kg

Related products

BB.DLA.ML

PS.DL.A

BB.DL

BB.ST.A

BB.DLA.OV

Our products are delivered from our factory in the Netherlands.

Registred under: HeBlad BV • HM Revenue and Customs • Ruby House 8 • Ruby Place • AB10 1ZP Aberdeen
VAT Number GB381060225 • EORI Number GB381060225000 • Commercial register (NL) 170 66 364
Rabobank De Kempen, Markt 7, 5531 BA Bladel (NL) • BIC RABONL2U • Branch code RABONL2UXXX • IBAN NL 20 RABO 0107530112 GBP

correspondence address

HeBlad - UK
The Balance, 7th floor, Pinfold Street
S1 2GU Sheffield, South Yorkshire
T. 0114 352 0110
info@HeBlad.co.uk
www.HeBlad.co.uk

head office address

Bench DeLuxe with backrest Natural Concrete

Product code: BB.DL.ML

£ 1,925.00 excl. VAT
(£ 2,310.00 incl. VAT)

This bench is equipped with high quality bamboo planks for the seating and backrest. This bench in the colour of natural concrete.
We sell this bench with a backrest and without bottom plate only with a safety warning. The backrest of this bench needs to be placed against a wall in order to avoid the bench to be turned over. Another possibility is to place two benches with their backrests back to back.
In case you want to place a single bench with backrest in e.g. park, than we advise you to take our bench with bottom plate, which is almost impossible to turn over.

Our products are delivered from our factory in the Netherlands.

Registred under: HeBlad BV • HM Revenue and Customs • Ruby House 8 • Ruby Place • AB10 1ZP Aberdeen
VAT Number GB381060225 • EORI Number GB381060225000 • Commercial register (NL) 170 66 364
Rabobank De Kempen, Markt 7, 5531 BA Bladel (NL) • BIC RABONL2U • Branch code RABONL2UXXX • IBAN NL 20 RABO 0107530112 GBP

correspondence address

HeBlad - UK
The Balance, 7th floor, Pinfold Street
S1 2GU Sheffield, South Yorkshire
T. 0114 352 0110
info@HeBlad.co.uk
www.HeBlad.co.uk

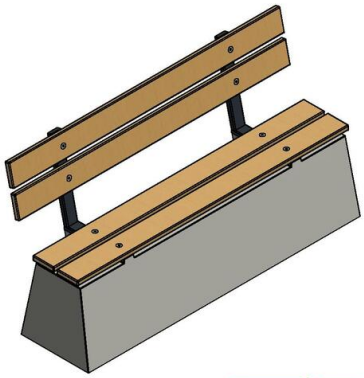

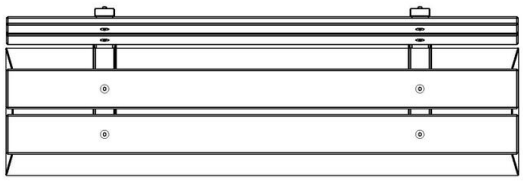

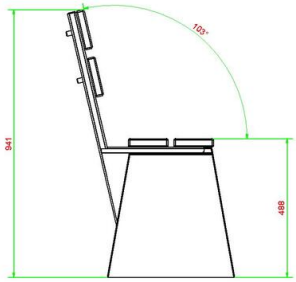

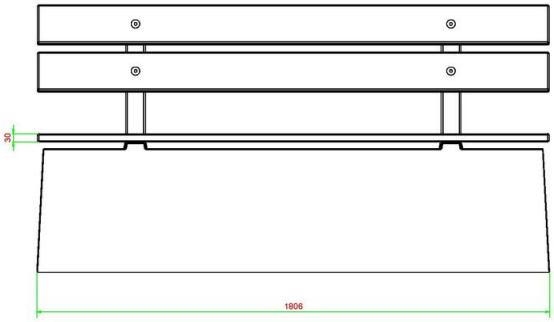

HeBlad
www.HeBlad.com
BB.DL.ML

gewicht ± 480 KG.

Specifications Bench DeLuxe with backrest Natural Concrete

Product code	BB.DL.ML	Material seat	Bamboo
Colour	Natural concrete	Seating corner	103 degrees
Dimensions (L x W x H)	180 x 45 x 95 cm	Number of seats	4
Seat height	48,5 cm	Weight	630 kg
Dimensions seat	180 x 30 cm		

Related products

BB.PB.OP

BB.DLAB.ML

BB.PBT

BB.PBAB.OP

BB.DL.OV

Our products are delivered from our factory in the Netherlands.

correspondence address

HeBlad - UK
The Balance, 7th floor, Pinfold Street
S1 2GU Sheffield, South Yorkshire
T. 0114 352 0110
info@HeBlad.co.uk
www.HeBlad.co.uk

head office address

Bench DeLuxe with backrest Anthracite-Concrete

Product code: BB.DLAB.ML

£ 1,975.00 excl. VAT
(£ 2,370.00 incl. VAT)

This concrete anthracite-coloured bench is equipped with a backrest. By using anthracite-coloured concrete this bench keeps its attractive “Concrete look” as an eye-catcher.
The seatings are made of durable bamboo.

Our products are delivered from our factory in the Netherlands.

Registred under: HeBlad BV • HM Revenue and Customs • Ruby House 8 • Ruby Place • AB10 1ZP Aberdeen
VAT Number GB381060225 • EORI Number GB381060225000 • Commercial register (NL) 170 66 364
Rabobank De Kempen, Markt 7, 5531 BA Bladel (NL) • BIC RABONL2U • Branch code RABONL2UXXX • IBAN NL 20 RABO 0107530112 GBP

correspondence address

HeBlad - UK
The Balance, 7th floor, Pinfold Street
S1 2GU Sheffield, South Yorkshire
T. 0114 352 0110
info@HeBlad.co.uk
www.HeBlad.co.uk

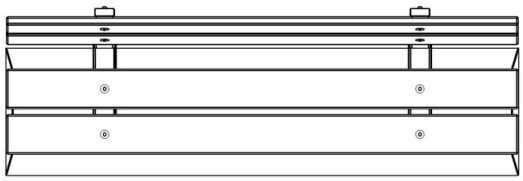

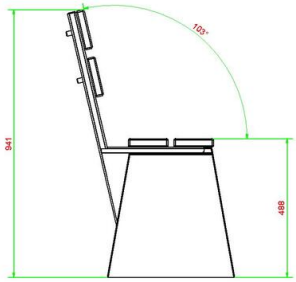

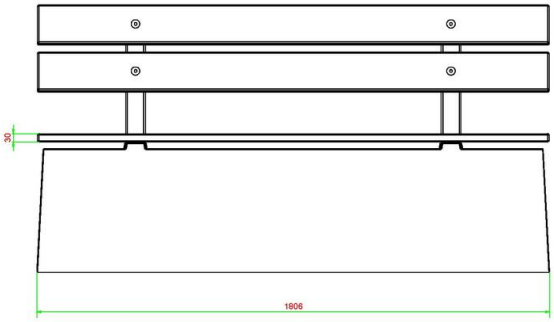

HeBlad
www.HeBlad.com
BB.DLAB.ML

gewicht ± 480 KG.

Specifications Bench DeLuxe with backrest Anthracite-Concrete

Product code	BB.DLAB.ML	Material seat	Bamboo
Colour	Anthracite concrete	Seating corner	103 degrees
Dimensions (L x W x H)	180 x 45 x 95 cm	Number of seats	4
Seat height	48,5 cm	Weight	630 kg
Dimensions seat	180 x 30 cm		

Related products

BB.PB.OP

BB.DLA.ML

BB.PBT.AB

BB.PBAB.OP

BB.DL.OV

Our products are delivered from our factory in the Netherlands.

correspondence address

HeBlad - UK
The Balance, 7th floor, Pinfold Street
S1 2GU Sheffield, South Yorkshire
T. 0114 352 0110
info@HeBlad.co.uk
www.HeBlad.co.uk

head office address

Concrete bench DeLuxe with backrest Anthracite

Product code: BB.DLA.ML

£ 2,025.00 excl. VAT
(£ 2,430.00 incl. VAT)

This bench is equipped with high quality bamboo planks for the seats and the backrest. This bench is sprayed in anthracite.
We sell this bench without backrest and without bottom plate only with a safety warning. The backrest of this bench needs to be placed against a wall in order to avoid the bench to be turned over. Another possibility is to place two benches with their backrests back to back.
In case you want to place a single bench with backrest in e.g.a park, than we advise you to take a bench with bottom plate, which is almost impossible to turn over.

Our products are delivered from our factory in the Netherlands.

Registred under: HeBlad BV • HM Revenue and Customs • Ruby House 8 • Ruby Place • AB10 1ZP Aberdeen
VAT Number GB381060225 • EORI Number GB381060225000 • Commercial register (NL) 170 66 364
Rabobank De Kempen, Markt 7, 5531 BA Bladel (NL) • BIC RABONL2U • Branch code RABONL2UXXX • IBAN NL 20 RABO 0107530112 GBP

correspondence address

HeBlad - UK
The Balance, 7th floor, Pinfold Street
S1 2GU Sheffield, South Yorkshire
T. 0114 352 0110
info@HeBlad.co.uk
www.HeBlad.co.uk

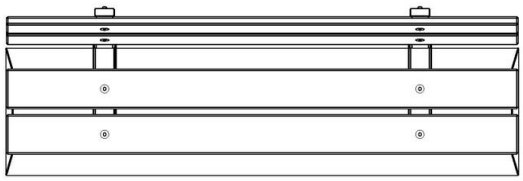

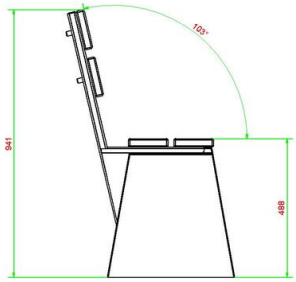

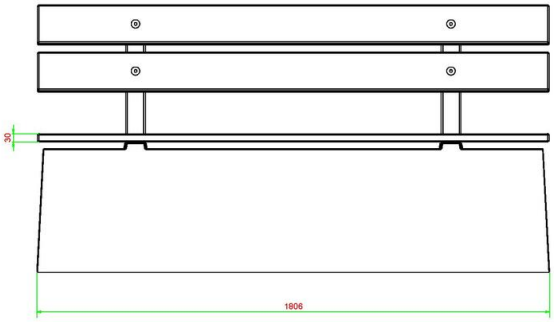

HeBlad
www.HeBlad.com
BB.DLA.ML

gewicht ± 480 KG.

Specifications Concrete bench DeLuxe with backrest Anthracite

Product code	BB.DLA.ML	Material seat	Bamboo
Colour	Anthracite lacquered, RAL 7016	Seating corner	103 degrees
Dimensions (L x W x H)	180 x 45 x 95 cm	Number of seats	4
Seat height	48,5 cm	Weight	630 kg
Dimensions seat	180 x 30 cm		

Related products

BB.DLAB.ML

BB.DL.ML

BB.PB.OP

BB.PBT.AB

BB.DL.OV

Our products are delivered from our factory in the Netherlands.

correspondence address

HeBlad - UK
The Balance, 7th floor, Pinfold Street
S1 2GU Sheffield, South Yorkshire
T. 0114 352 0110
info@HeBlad.co.uk
www.HeBlad.co.uk

head office address

Bench DeLuxe with bottom plate and backrest Naural Concrete

£ 2,075.00 excl. VAT
(£ 2,490.00 incl. VAT)

Product code: BB.DL.OP

A bench with backrest, complete with bottom plate, moulded in one piece. The seat as well the backrest of this bench are provided with bamboo planks. Due to the bottom plate the bench remains solid and durable.

By placing this bench level with the grass, it is easy for a lawnmower to roll over the edge of the plate. No unpleasant grass-stalks have to be removed by hand and the place looks tidy.

Our products are delivered from our factory in the Netherlands.

Registred under: HeBlad BV • HM Revenue and Customs • Ruby House 8 • Ruby Place • AB10 1ZP Aberdeen
VAT Number GB381060225 • EORI Number GB381060225000 • Commercial register (NL) 170 66 364
Rabobank De Kempen, Markt 7, 5531 BA Bladel (NL) • BIC RABONL2U • Branch code RABONL2UXXX • IBAN NL 20 RABO 0107530112 GBP

correspondence address

HeBlad - UK
The Balance, 7th floor, Pinfold Street
S1 2GU Sheffield, South Yorkshire
T. 0114 352 0110
info@HeBlad.co.uk
www.HeBlad.co.uk

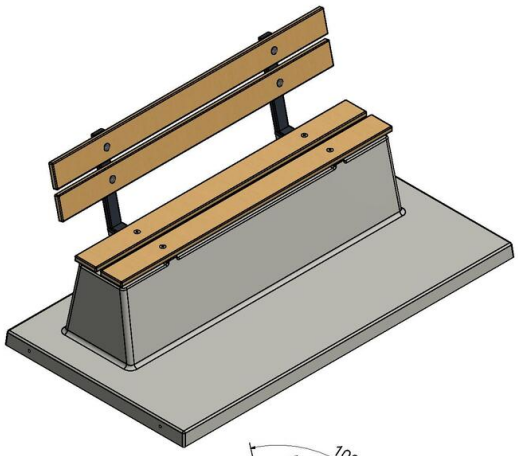

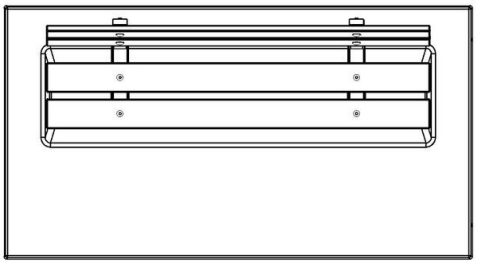

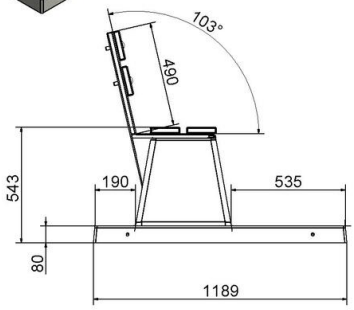

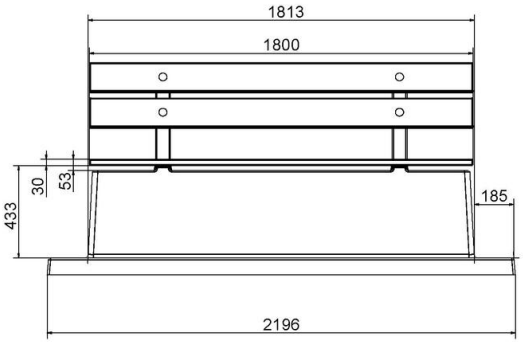

HeBlad
www.HeBlad.com
BB.DL.OP

gewicht ± 1200 KG.

Specifications Bench DeLuxe with bottom plate and backrest Naural Concrete

Product code	BB.DL.OP	Seating corner	103 degrees
Colour	Natural concrete	Number of seats	4
Dimensions (L x W x H)	219,5 x 119 x 103 cm	Dimensions base plate (L x W x H)	219,5 x 119 x 8 cm
Seat height	45 cm	Finishing base plate	Smooth concrete
Dimensions seat	180 x 30 cm	Weight	1230 kg
Material seat	Bamboo		

Related products

BB.DLA.OP

BB.DLAB.OP.ZL

BB.PBT

BB.PBAB.OP

BB.DL.OV

Our products are delivered from our factory in the Netherlands.

correspondence address

HeBlad - UK
The Balance, 7th floor, Pinfold Street
S1 2GU Sheffield, South Yorkshire
T. 0114 352 0110
info@HeBlad.co.uk
www.HeBlad.co.uk

head office address

Bench DeLuxe with bottom plate and backrest Anthracite-Concrete

£ 2,125.00 excl. VAT
(£ 2,550.00 incl. VAT)

Product code: BB.DLAB.OP

Concrete bench with backrest and concrete bottom plate, entirely made in one piece of anthracite-coloured concrete – through and through. These benches are made for placing in the grass or in a park. Contrary to our open park benches this bench is closed under the seating, that makes it easier to maintain a clean place.

Our products are delivered from our factory in the Netherlands.

Registred under: HeBlad BV • HM Revenue and Customs • Ruby House 8 • Ruby Place • AB10 1ZP Aberdeen
VAT Number GB381060225 • EORI Number GB381060225000 • Commercial register (NL) 170 66 364
Rabobank De Kempen, Markt 7, 5531 BA Bladel (NL) • BIC RABONL2U • Branch code RABONL2UXXX • IBAN NL 20 RABO 0107530112 GBP

correspondence address

HeBlad - UK
The Balance, 7th floor, Pinfold Street
S1 2GU Sheffield, South Yorkshire
T. 0114 352 0110
info@HeBlad.co.uk
www.HeBlad.co.uk

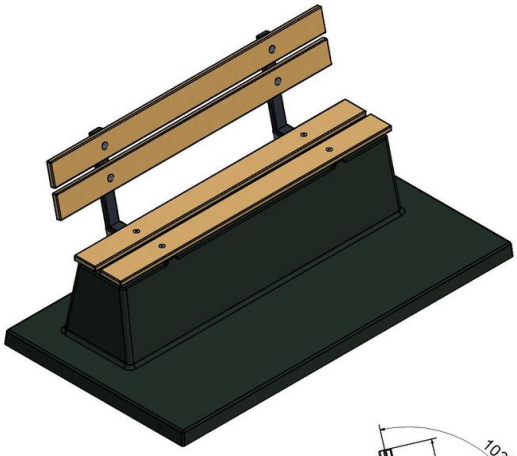

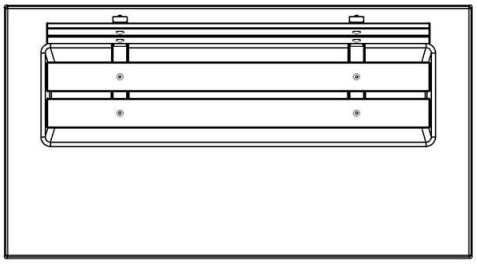

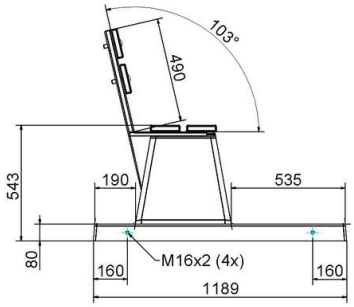

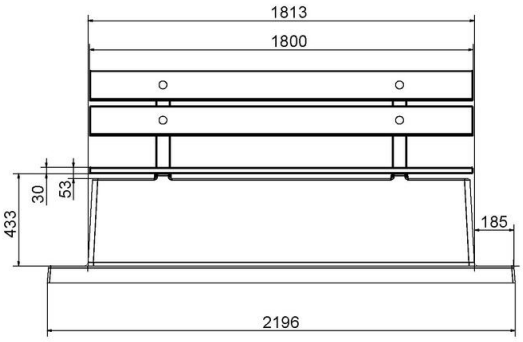

HeBlad
www.HeBlad.com
BB.DLAB.OP

gewicht ± 1200 KG.

Specifications Bench DeLuxe with bottom plate and backrest Anthracite-Concrete

Product code	BB.DLAB.OP	Seating corner	103 degrees
Colour	Anthracite concrete	Number of seats	4
Dimensions (L x W x H)	219,5 x 119 x 103 cm	Dimensions base plate (L x W x H)	219,5 x 119 x 8 cm
Seat height	45 cm	Finishing base plate	Smooth concrete
Dimensions seat	180 x 30 cm	Weight	1230 kg
Material seat	Bamboo		

Related products

BB.DLA.OP

BB.PBT

BB.PB.OP

BB.PBAB.OP

Our products are delivered from our factory in the Netherlands.

correspondence address

HeBlad - UK
The Balance, 7th floor, Pinfold Street
S1 2GU Sheffield, South Yorkshire
T. 0114 352 0110
info@HeBlad.co.uk
www.HeBlad.co.uk

head office address

Concrete bench DeLuxe with bottom plate and backrest Anthracite

£ 2,175.00 excl. VAT
(£ 2,610.00 incl. VAT)

Product code: BB.DLA.OP

This bench with the seat and backrest provided with bamboo planks offers a relaxed seat. Due to the anthracite colour it is almost unbelievable that this bench is made of concrete. The bench is produced with a bottom plate. Thus, made in one piece.

Always a tidy place to relax as no grass can grow underneath. As well as the place in front of the bench will never be wet or muddy because of the “integrated” solid underground.

Our products are delivered from our factory in the Netherlands.

Registred under: HeBlad BV • HM Revenue and Customs • Ruby House 8 • Ruby Place • AB10 1ZP Aberdeen
VAT Number GB381060225 • EORI Number GB381060225000 • Commercial register (NL) 170 66 364
Rabobank De Kempen, Markt 7, 5531 BA Bladel (NL) • BIC RABONL2U • Branch code RABONL2UXXX • IBAN NL 20 RABO 0107530112 GBP

correspondence address

HeBlad - UK
The Balance, 7th floor, Pinfold Street
S1 2GU Sheffield, South Yorkshire
T. 0114 352 0110
info@HeBlad.co.uk
www.HeBlad.co.uk

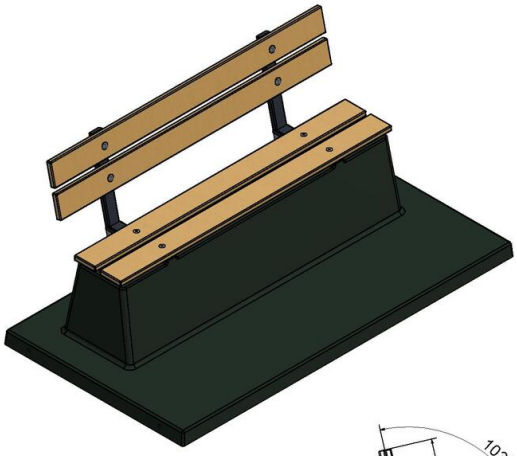

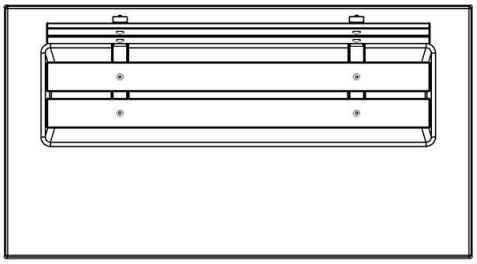

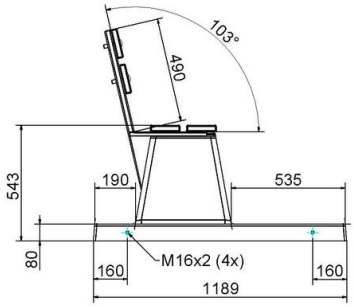

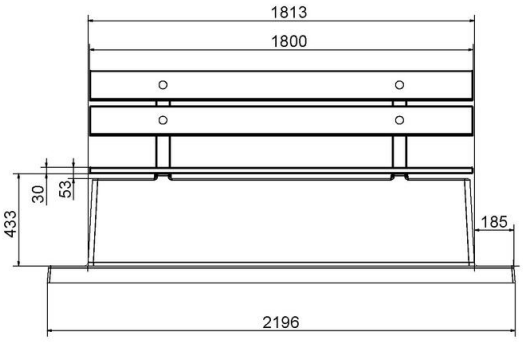

HeBlad
www.HeBlad.com
BB.DLA.OP

gewicht ± 1200 KG.

Specifications Concrete bench DeLuxe with bottom plate and backrest Anthracite

Product code	BB.DLA.OP	Seating corner	103 degrees
Colour	Anthracite lacquered, RAL 7016	Number of seats	4
Dimensions (L x W x H)	219,5 x 119 x 103 cm	Dimensions base plate (L x W x H)	219,5 x 119 x 8 cm
Seat height	45 cm	Finishing base plate	Smooth concrete
Dimensions seat	180 x 30 cm	Weight	1230 kg
Material seat	Bamboo		

Related products

BB.DLAB.OP

BB.DL.OP

BB.PB.OP

BB.PBT.AB

BB.DL.OV

Our products are delivered from our factory in the Netherlands.

correspondence address

HeBlad - UK
The Balance, 7th floor, Pinfold Street
S1 2GU Sheffield, South Yorkshire
T. 0114 352 0110
info@HeBlad.co.uk
www.HeBlad.co.uk

head office address

Bench DeLuxe with bottom plate without backrest Natural Concrete

£ 1,900.00 excl. VAT
(£ 2,280.00 incl. VAT)

Product code: BB.DL.OP.ZL

This bench in natural concrete colour and provided with bamboo planks it offers a relaxed seat. The bench is manufactured with a bottom plate, that means moulded in one piece. This design has NO backrest.

Always a tidy place to relax as no grass can grow underneath. As well as this, the place in front of the bench will never be wet or muddy because of the “integrated” solid underground.

Our products are delivered from our factory in the Netherlands.

Registred under: HeBlad BV • HM Revenue and Customs • Ruby House 8 • Ruby Place • AB10 1ZP Aberdeen
VAT Number GB381060225 • EORI Number GB381060225000 • Commercial register (NL) 170 66 364
Rabobank De Kempen, Markt 7, 5531 BA Bladel (NL) • BIC RABONL2U • Branch code RABONL2UXXX • IBAN NL 20 RABO 0107530112 GBP

correspondence address

HeBlad - UK
The Balance, 7th floor, Pinfold Street
S1 2GU Sheffield, South Yorkshire
T. 0114 352 0110
info@HeBlad.co.uk
www.HeBlad.co.uk

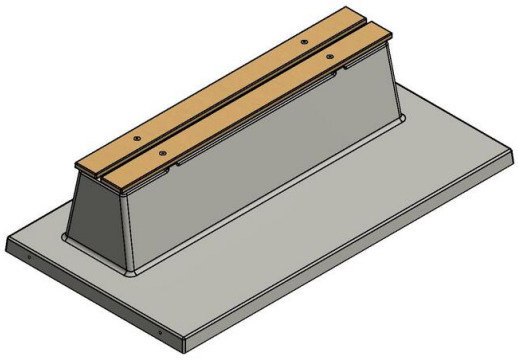

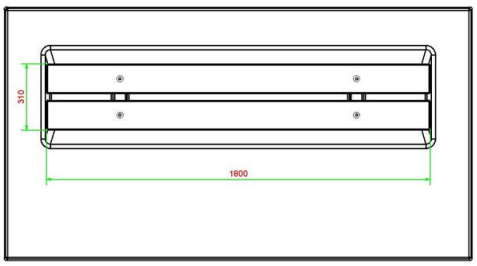

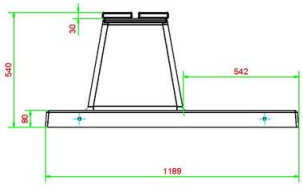

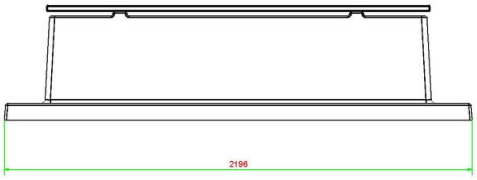

HeBlad
www.HeBlad.com
BB.DL.OP.ZL

gewicht ± 1200 KG.

Specifications Bench DeLuxe with bottom plate without backrest Natural Concrete

Product code	BB.DL.OP.ZL	Material seat	Bamboo
Colour	Natural concrete	Number of seats	4
Dimensions (L x W x H)	219,5 x 119 x 56,5 cm	Dimensions base plate (L x W x H)	219,5 x 119 x 8 cm
Seat height	45 cm	Finishing base plate	Smooth concrete
Dimensions seat	180 x 30 cm	Weight	1200 kg

Related products

BB.ST.A

PS.DL.RT

PP.AR.GR

HB.FB.A

BB.PB.OP

Our products are delivered from our factory in the Netherlands.

correspondence address

HeBlad - UK
The Balance, 7th floor, Pinfold Street
S1 2GU Sheffield, South Yorkshire
T. 0114 352 0110
info@HeBlad.co.uk
www.HeBlad.co.uk

head office address

Bench DeLuxe with bottom plate without backrest Anthracite-Concrete

Product code: BB.DLAB.OP.ZL

Concrete bench without backrest, but with a concrete bottom plate entirely moulded in one piece with anthracite-coloured concrete. Due to the lack of a backrest, this bench is less suitable for elderly people to sit on for a longer time.

£ 1,950.00 excl. VAT
(£ 2,340.00 incl. VAT)

Our products are delivered from our factory in the Netherlands.

12 October 2024 - Prices subject to change

correspondence address

HeBlad - UK
The Balance, 7th floor, Pinfold Street
S1 2GU Sheffield, South Yorkshire
T. 0114 352 0110
info@HeBlad.co.uk
www.HeBlad.co.uk

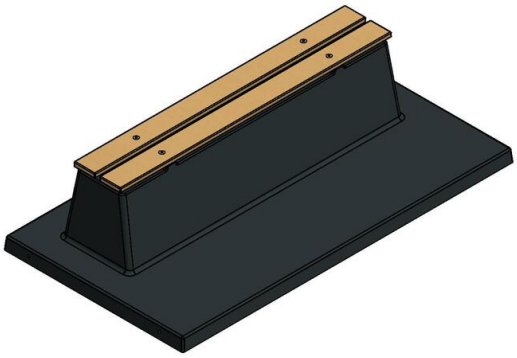

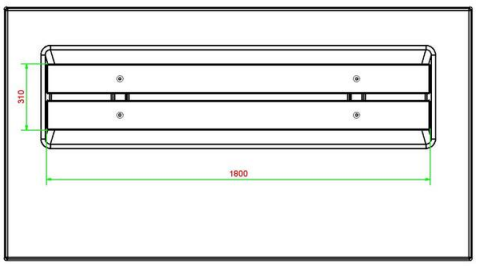

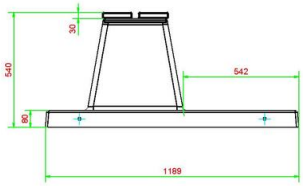

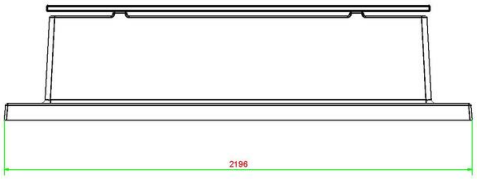

HeBlad
www.HeBlad.com
BB.DLAB.OP.ZL

gewicht ± 1200 KG.

Specifications Bench DeLuxe with bottom plate without backrest Anthracite-Concrete

Product code	BB.DLAB.OP.ZL	Material seat	Bamboo
Colour	Anthracite concrete	Number of seats	4
Dimensions (L x W x H)	219,5 x 119 x 56,5 cm	Dimensions base plate (L x W x H)	219,5 x 119 x 8 cm
Seat height	45 cm	Finishing base plate	Smooth concrete
Dimensions seat	180 x 30 cm	Weight	1200 kg

Related products

BB.DL.OP.ZL

BB.DLAB.ML

BB.PB.OP

BB.DLA.OP

BB.DL.OV

Our products are delivered from our factory in the Netherlands.

correspondence address

HeBlad - UK
The Balance, 7th floor, Pinfold Street
S1 2GU Sheffield, South Yorkshire
T. 0114 352 0110
info@HeBlad.co.uk
www.HeBlad.co.uk

head office address

Concrete bench DeLuxe with bottom plate without backrest Anthracite

£ 2,000.00 excl. VAT
(£ 2,400.00 incl. VAT)

Product code: BB.DLA.OP.ZL

This bench is provided with bamboo planks and offers a relaxed seat. Due to the anthracite colour it is almost unbelievable that this bench is made of concrete. The bench is manufactured with a bottom plate, that means that it is moulded in one piece. This design has NO backrest.

Always a tidy place to relax as no grass can grow underneath. In front of this bench the “integrated” solid underground is 50 cm. Enough space to keep dry and clean feet even after a rain shower.

Our products are delivered from our factory in the Netherlands.

Registred under: HeBlad BV • HM Revenue and Customs • Ruby House 8 • Ruby Place • AB10 1ZP Aberdeen
VAT Number GB381060225 • EORI Number GB381060225000 • Commercial register (NL) 170 66 364
Rabobank De Kempen, Markt 7, 5531 BA Bladel (NL) • BIC RABONL2U • Branch code RABONL2UXXX • IBAN NL 20 RABO 0107530112 GBP

correspondence address

HeBlad - UK
The Balance, 7th floor, Pinfold Street
S1 2GU Sheffield, South Yorkshire
T. 0114 352 0110
info@HeBlad.co.uk
www.HeBlad.co.uk

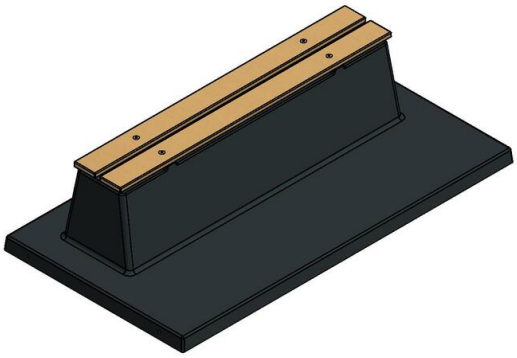

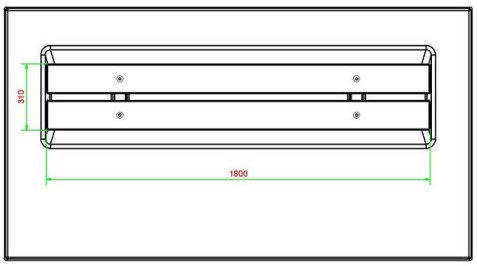

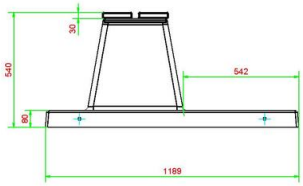

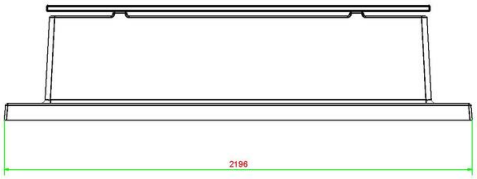

HeBlad
www.HeBlad.com
BB.DLA.OP.ZL

gewicht ± 1200 KG.

Specifications Concrete bench DeLuxe with bottom plate without backrest Anthracite

Product code	BB.DLA.OP.ZL	Material seat	Bamboo
Colour	Anthracite lacquered, RAL 7016	Number of seats	4
Dimensions (L x W x H)	219,5 x 119 x 56,5 cm	Dimensions base plate (L x W x H)	219,5 x 119 x 8 cm
Seat height	45 cm	Finishing base plate	Smooth concrete
Dimensions seat	180 x 30 cm	Weight	1200 kg

Related products

BB.DLA.OV

PS.DLA.RT

PP.AR.BL

HB.FB.A

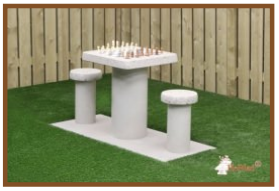
GT.CH.G2

Our products are delivered from our factory in the Netherlands.

correspondence address

HeBlad - UK
The Balance, 7th floor, Pinfold Street
S1 2GU Sheffield, South Yorkshire
T. 0114 352 0110
info@HeBlad.co.uk
www.HeBlad.co.uk

head office address

Parkbench Duo Concrete

Product code: BB.PB.DUO

£ 2,000.00 excl. VAT
(£ 2,400.00 incl. VAT)

(Secondary) schools are the ideal location for these benches. When placing multiple benches in a row, children can sit here in "train seats" with their backs to each other. This creates groups of up to 8 people who can be together. The benches have backs and can be placed on the pavement.

Additional possibilities:

When placing these duo benches in places that are more prone to vandalism, you can choose to mount an "Anchor Set" (HB.VS) on the underside of the legs and cover it with concrete. If you want to use this anchor set on an existing schoolyard, you need to dig 2 holes in the pavement, install the anchors and cover them with a bucket of concrete.
When you want to place these duo benches on a lawn, we advise you to use concrete slabs. On the picture of the product, you can see the " Base of the Picnic Set" (OP.PS). This results in a large concrete pavement in the grass, especially with the placement of several tables in a row. This is not always desirable.
This duo bench also fits on a "Set of Concrete Support Blocks" (OV.PP.SET). By using these concrete plates, more grass remains visible, which prevents a park from resembling a concrete pavement. These concrete foundation plates protrude 5 cm all around, in relation to the legs, so that the grass, which is difficult to mow, has no chance to grow directly on the legs.

Our products are delivered from our factory in the Netherlands.

Registred under: HeBlad BV • HM Revenue and Customs • Ruby House 8 • Ruby Place • AB10 1ZP Aberdeen
VAT Number GB381060225 • EORI Number GB381060225000 • Commercial register (NL) 170 66 364
Rabobank De Kempen, Markt 7, 5531 BA Bladel (NL) • BIC RABONL2U • Branch code RABONL2UXXX • IBAN NL 20 RABO 0107530112 GBP

correspondence address

HeBlad - UK
The Balance, 7th floor, Pinfold Street
S1 2GU Sheffield, South Yorkshire
T. 0114 352 0110
info@HeBlad.co.uk
www.HeBlad.co.uk

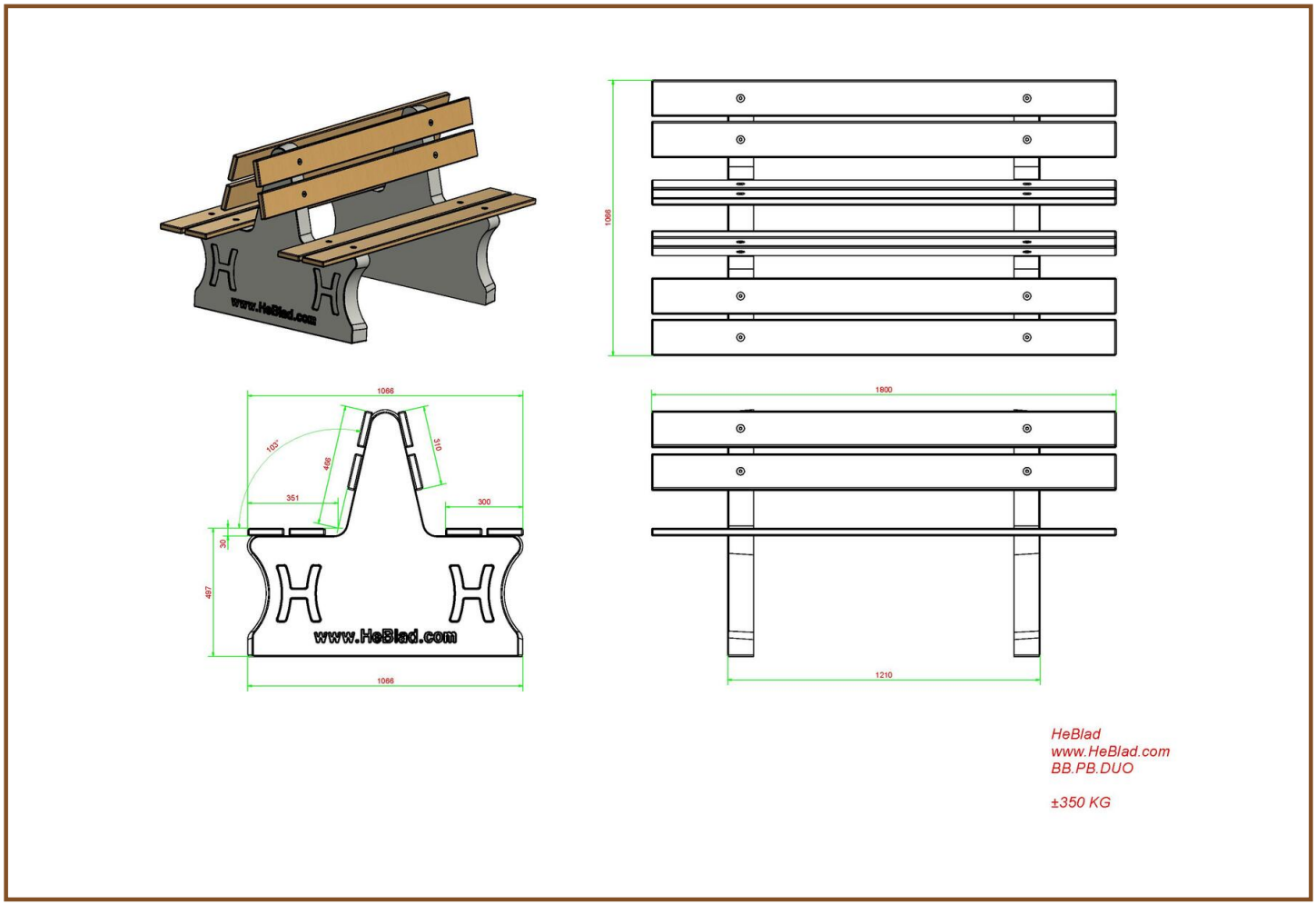

Specifications Parkbench Duo Concrete

Product code	BB.PB.DUO	Material seat	Bamboo
Colour	Natural concrete	Seating corner	103 degrees
Dimensions (L x W x H)	180 x 106 x 94 cm	Number of seats	8
Seat height	50 cm	Weight	350 kg
Dimensions seat	180 x 30 cm	Distance legs	111 cm (center to center)

Our products are delivered from our factory in the Netherlands.

correspondence address

HeBlad - UK
The Balance, 7th floor, Pinfold Street
S1 2GU Sheffield, South Yorkshire
T. 0114 352 0110
info@HeBlad.co.uk
www.HeBlad.co.uk

head office address

Park Bench with bottom plate Natural Concrete

Product code: BB.PB.OP

£ 2,150.00 excl. VAT
(£ 2,580.00 incl. VAT)

This park bench in Natural Concrete is ideal for communities and park management. The benches are eye pleasing and above all extremely strong through the solid construction of the heavy legs. Because these legs are moulded in one piece together with the bottom plate you get a hardening underneath the bench as well.

Our products are delivered from our factory in the Netherlands.

Registred under: HeBlad BV • HM Revenue and Customs • Ruby House 8 • Ruby Place • AB10 1ZP Aberdeen
VAT Number GB381060225 • EORI Number GB381060225000 • Commercial register (NL) 170 66 364
Rabobank De Kempen, Markt 7, 5531 BA Bladel (NL) • BIC RABONL2U • Branch code RABONL2UXXX • IBAN NL 20 RABO 0107530112 GBP

correspondence address

HeBlad - UK
The Balance, 7th floor, Pinfold Street
S1 2GU Sheffield, South Yorkshire
T. 0114 352 0110
info@HeBlad.co.uk
www.HeBlad.co.uk

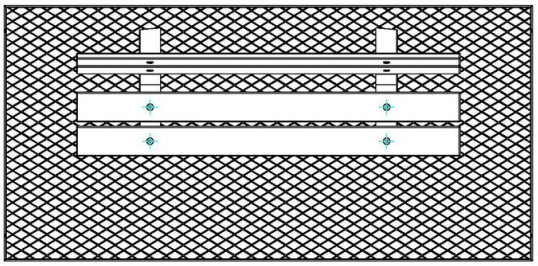

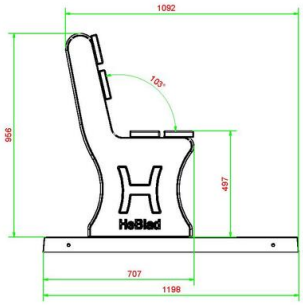

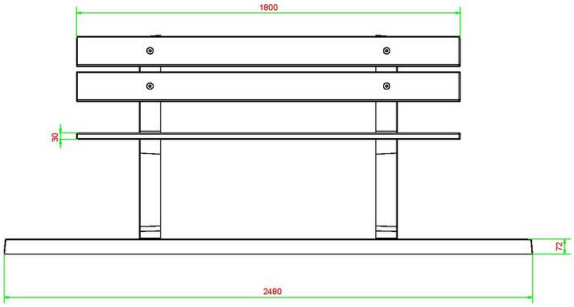

HeBlad
www.HeBlad.com
BB.PB.OP

gewicht ± 700 KG.

Specifications Park Bench with bottom plate Natural Concrete

Product code	BB.PB.OP	Material seat	Bamboo
Colour	Natural concrete	Number of seats	4
Dimensions (L x W x H)	248 x 120 x 103 cm	Dimensions base plate (L x W x H)	248 x 120 x 7 cm
Dimensions seat	180 x 30 cm	Finishing base plate	Anti-slip (window) profile
Seat height	49 cm	Weight	700 kg
Seating corner	103 degrees		

Related products

BB.PBAB.OP

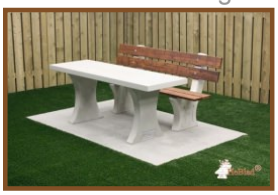
BB.PBT

BB.DLA.OP.ZL

BB.DLAB.OP

BB.DLAB.OV

Our products are delivered from our factory in the Netherlands.

correspondence address

HeBlad - UK
The Balance, 7th floor, Pinfold Street
S1 2GU Sheffield, South Yorkshire
T. 0114 352 0110
info@HeBlad.co.uk
www.HeBlad.co.uk

head office address

Park Bench Duo anthracite-concrete

Product code: BB.PBAB.DUO

£ 2,100.00 excl. VAT
(£ 2,520.00 incl. VAT)

(Secondary) schools are the ideal location for these benches. When placing multiple benches in a row, children can sit here in "train seats" with their backs to each other. This creates groups of up to 8 people who can be together. The benches have backs and can be placed on the pavement.

Additional possibilities:

When placing these duo benches in places that are more prone to vandalism, you can choose to mount an "Anchor Set" (HB.VS) on the underside of the legs and cover it with concrete. If you want to use this anchor set on an existing schoolyard, you need to dig 2 holes in the pavement, install the anchors and cover them with a bucket of concrete.
When you want to place these duo benches on a lawn, we advise you to use concrete slabs. On the picture of the product, you can see the " Base of the Picnic Set" (OP.PS). This results in a large concrete pavement in the grass, especially with the placement of several tables in a row. This is not always desirable.
This duo bench also fits on a "Set of Concrete Support Blocks" (OV.PP.SET). By using these concrete plates, more grass remains visible, which prevents a park from resembling a concrete pavement. These concrete foundation plates protrude 5 cm all around, in relation to the legs, so that the grass, which is difficult to mow, has no chance to grow directly on the legs.

Our products are delivered from our factory in the Netherlands.

Registred under: HeBlad BV • HM Revenue and Customs • Ruby House 8 • Ruby Place • AB10 1ZP Aberdeen
VAT Number GB381060225 • EORI Number GB381060225000 • Commercial register (NL) 170 66 364
Rabobank De Kempen, Markt 7, 5531 BA Bladel (NL) • BIC RABONL2U • Branch code RABONL2UXXX • IBAN NL 20 RABO 0107530112 GBP

correspondence address

HeBlad - UK
The Balance, 7th floor, Pinfold Street
S1 2GU Sheffield, South Yorkshire
T. 0114 352 0110
info@HeBlad.co.uk
www.HeBlad.co.uk

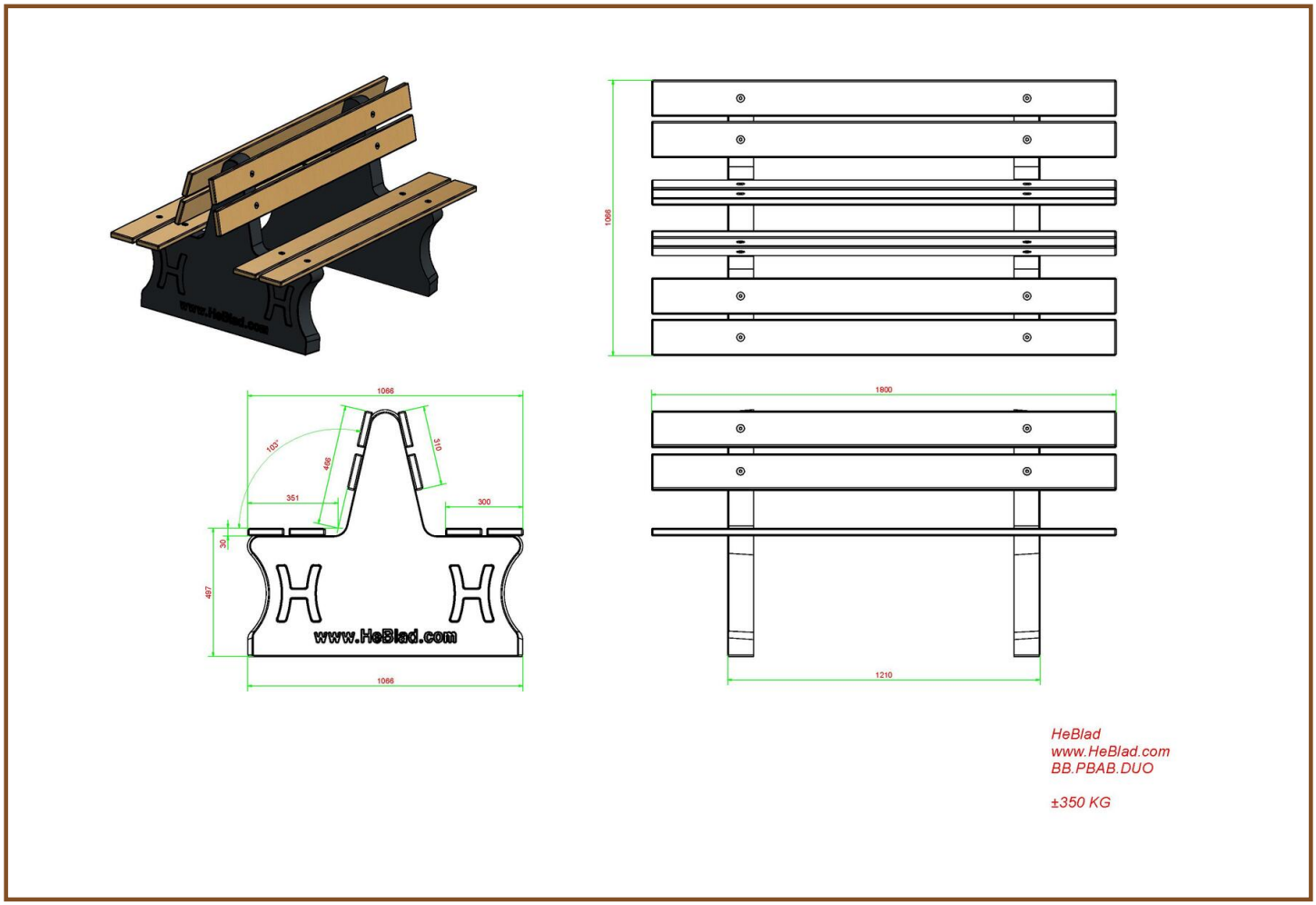

Specifications Park Bench Duo anthracite-concrete

Product code	BB.PBAB.DUO	Material seat	Bamboo
Colour	Anthracite concrete	Seating corner	103 degrees
Dimensions (L x W x H)	180 x 106 x 94 cm	Number of seats	8
Seat height	50 cm	Weight	350 kg
Dimensions seat	180 x 30 cm	Distance legs	111 cm (center to center)

Our products are delivered from our factory in the Netherlands.

correspondence address

HeBlad - UK
The Balance, 7th floor, Pinfold Street
S1 2GU Sheffield, South Yorkshire
T. 0114 352 0110
info@HeBlad.co.uk
www.HeBlad.co.uk

head office address

Park Bench with bottom plate Anthracite-Concrete

Product code: BB.PBAB.OP

£ 2,250.00 excl. VAT
(£ 2,700.00 incl. VAT)

This park bench coloured through and through in anthracite is ideal for communities and park management. The benches are eye pleasing and above all extremely strong through the solid construction of the heavy legs. Because these legs are moulded in one piece together with the bottom plate you get a hardening underneath the bench as well.

Our products are delivered from our factory in the Netherlands.

Registred under: HeBlad BV • HM Revenue and Customs • Ruby House 8 • Ruby Place • AB10 1ZP Aberdeen
VAT Number GB381060225 • EORI Number GB381060225000 • Commercial register (NL) 170 66 364
Rabobank De Kempen, Markt 7, 5531 BA Bladel (NL) • BIC RABONL2U • Branch code RABONL2UXXX • IBAN NL 20 RABO 0107530112 GBP

correspondence address

HeBlad - UK
The Balance, 7th floor, Pinfold Street
S1 2GU Sheffield, South Yorkshire
T. 0114 352 0110
info@HeBlad.co.uk
www.HeBlad.co.uk

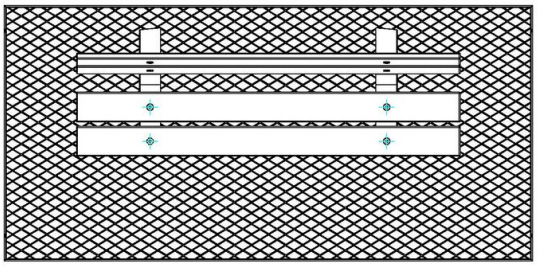

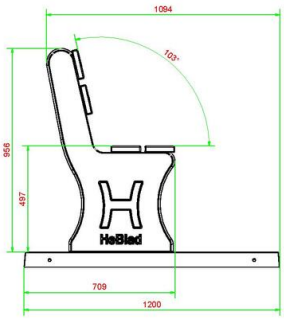

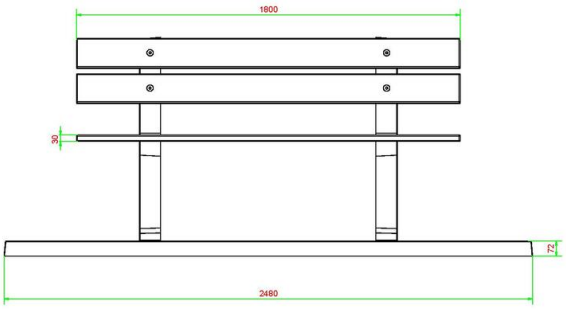

HeBlad
www.HeBlad.com
BB.PBAB.OP

gewicht ± 700 KG.

Specifications Park Bench with bottom plate Anthracite-Concrete

Product code	BB.PBAB.OP	Material seat	Bamboo
Colour	Anthracite concrete	Number of seats	4
Dimensions (L x W x H)	248 x 120 x 103 cm	Dimensions base plate (L x W x H)	248 x 120 x 7 cm
Dimensions seat	180 x 30 cm	Finishing base plate	Anti-slip (window) profile
Seat height	49 cm	Weight	700 kg
Seating corner	103 degrees		

Related products

BB.PB.OP

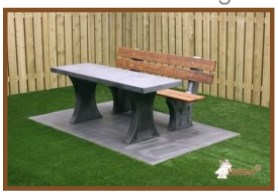
BB.PBT.AB

BB.DL.OP.ZL

BB.DLAB.OP

BB.DL.OV

Our products are delivered from our factory in the Netherlands.

correspondence address

HeBlad - UK
The Balance, 7th floor, Pinfold Street
S1 2GU Sheffield, South Yorkshire
T. 0114 352 0110
info@HeBlad.co.uk
www.HeBlad.co.uk

head office address

Chess Bench, Natural Concrete

Product code: BB.CH

£ 2,200.00 excl. VAT
(£ 2,640.00 incl. VAT)

Again a stunning product in our line of game tables and benches. For school yards and public areas an ideal seating to play a game of chess. Think also of city centres, this bench is by its weight ideal as protection against ram raid.

* When ordering one Chess Bench you will receive 1 set of chess pieces free of charge.

Our products are delivered from our factory in the Netherlands.

Registred under: HeBlad BV • HM Revenue and Customs • Ruby House 8 • Ruby Place • AB10 1ZP Aberdeen
VAT Number GB381060225 • EORI Number GB381060225000 • Commercial register (NL) 170 66 364
Rabobank De Kempen, Markt 7, 5531 BA Bladel (NL) • BIC RABONL2U • Branch code RABONL2UXXX • IBAN NL 20 RABO 0107530112 GBP

correspondence address

HeBlad - UK
The Balance, 7th floor, Pinfold Street
S1 2GU Sheffield, South Yorkshire
T. 0114 352 0110
info@HeBlad.co.uk
www.HeBlad.co.uk

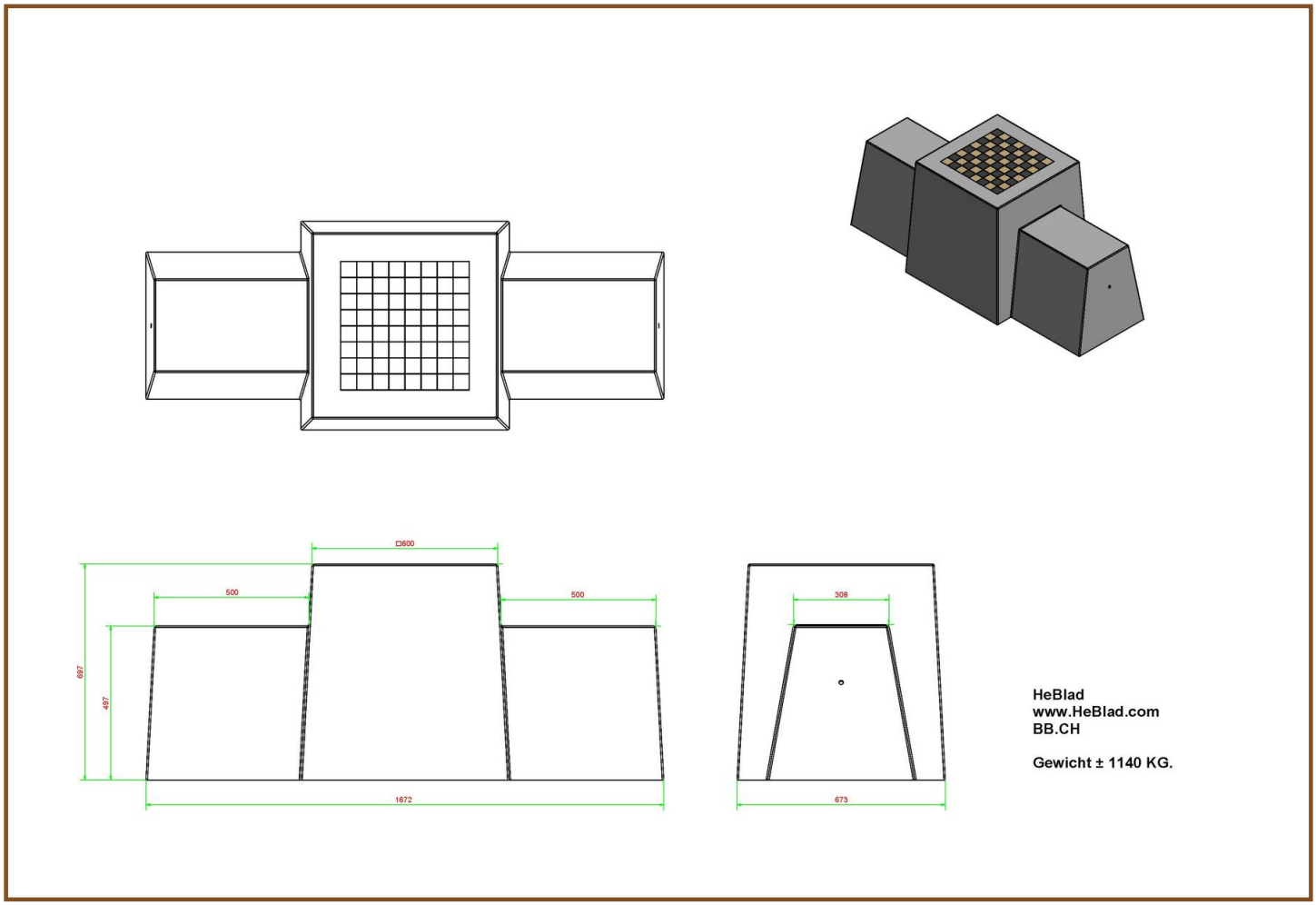

Specifications Chess Bench, Natural Concrete

Product code	BB.CH	Height tabletop	70 cm
Colour	Natural concrete	Weight	1140 kg
Dimensions (L x W x H)	167 x 67 x 70 cm	Number of seats	2
Seat height	50 cm		

Related products

BB.CH.AB

BB.CK

GT.CH.2

GT.CH.Pieces

Our products are delivered from our factory in the Netherlands.

correspondence address

HeBlad - UK
The Balance, 7th floor, Pinfold Street
S1 2GU Sheffield, South Yorkshire
T. 0114 352 0110
info@HeBlad.co.uk
www.HeBlad.co.uk

head office address

Checkers/Drafts Bench, Natural Concrete

Product code: BB.CK

£ 2,250.00 excl. VAT
(£ 2,700.00 incl. VAT)

A beautiful bench with a tabletop for a game of draughts. Especially for outdoors, like all our HeBlad products.
Ideal for school yards, parks or city centres. But this bench is also particularly suitable as protection against ram raid. Carried out in natural concrete.

* When ordering one Checkers/Drafts Bench you will receive 1 set of drafts with it.

Our products are delivered from our factory in the Netherlands.

Registred under: HeBlad BV • HM Revenue and Customs • Ruby House 8 • Ruby Place • AB10 1ZP Aberdeen
VAT Number GB381060225 • EORI Number GB381060225000 • Commercial register (NL) 170 66 364
Rabobank De Kempen, Markt 7, 5531 BA Bladel (NL) • BIC RABONL2U • Branch code RABONL2UXXX • IBAN NL 20 RABO 0107530112 GBP

correspondence address

HeBlad - UK
The Balance, 7th floor, Pinfold Street
S1 2GU Sheffield, South Yorkshire
T. 0114 352 0110
info@HeBlad.co.uk
www.HeBlad.co.uk

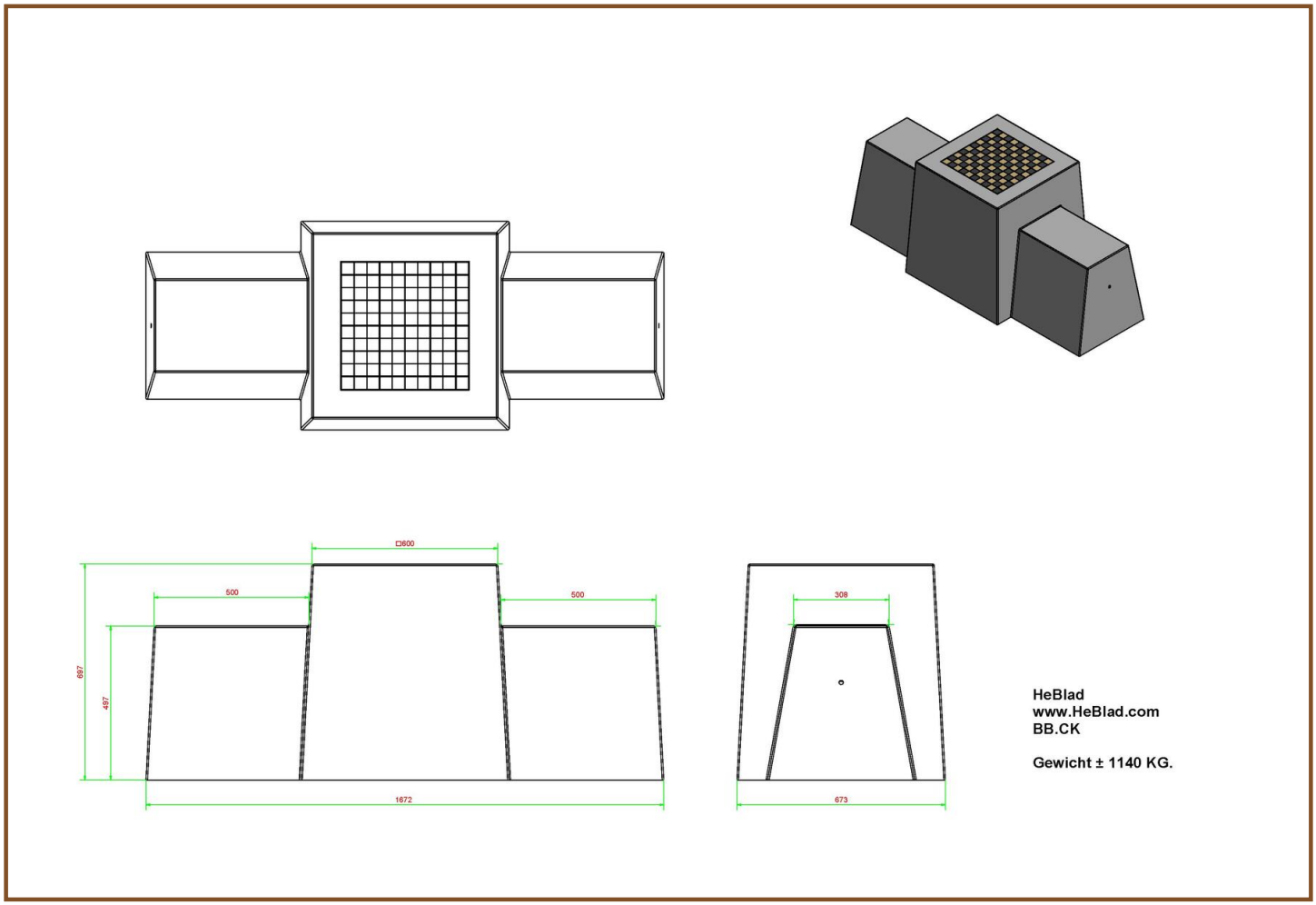

Specifications Checkers/Drafts Bench, Natural Concrete

Product code	BB.CK	Height tabletop	70 cm
Colour	Natural concrete	Weight	1140 kg
Dimensions (L x W x H)	167 x 67 x 70 cm	Number of seats	2
Seat height	50 cm		

Related products

BB.CK.AB

BB.CH

GT.CK.2

GT.CK.Pieces

GT.CH.4

Our products are delivered from our factory in the Netherlands.

correspondence address

HeBlad - UK
The Balance, 7th floor, Pinfold Street
S1 2GU Sheffield, South Yorkshire
T. 0114 352 0110
info@HeBlad.co.uk
www.HeBlad.co.uk

head office address

Chess Bench, Anthracite-Concrete

Product code: BB.CH.AB

£ 2,275.00 excl. VAT
(£ 2,730.00 incl. VAT)

An expressive version in Anthracite-Concrete, this Chess Bench, in unique design, suitable for any location where a bench or game table is in place. Think of school yards, parks, city centres. This bench is also ideal for protection against ram raid.

* When ordering one Chess Bench you will receive 1 set of chess pieces free of charge.

Our products are delivered from our factory in the Netherlands.

Registred under: HeBlad BV • HM Revenue and Customs • Ruby House 8 • Ruby Place • AB10 1ZP Aberdeen
VAT Number GB381060225 • EORI Number GB381060225000 • Commercial register (NL) 170 66 364
Rabobank De Kempen, Markt 7, 5531 BA Bladel (NL) • BIC RABONL2U • Branch code RABONL2UXXX • IBAN NL 20 RABO 0107530112 GBP

correspondence address

HeBlad - UK
The Balance, 7th floor, Pinfold Street
S1 2GU Sheffield, South Yorkshire
T. 0114 352 0110
info@HeBlad.co.uk
www.HeBlad.co.uk

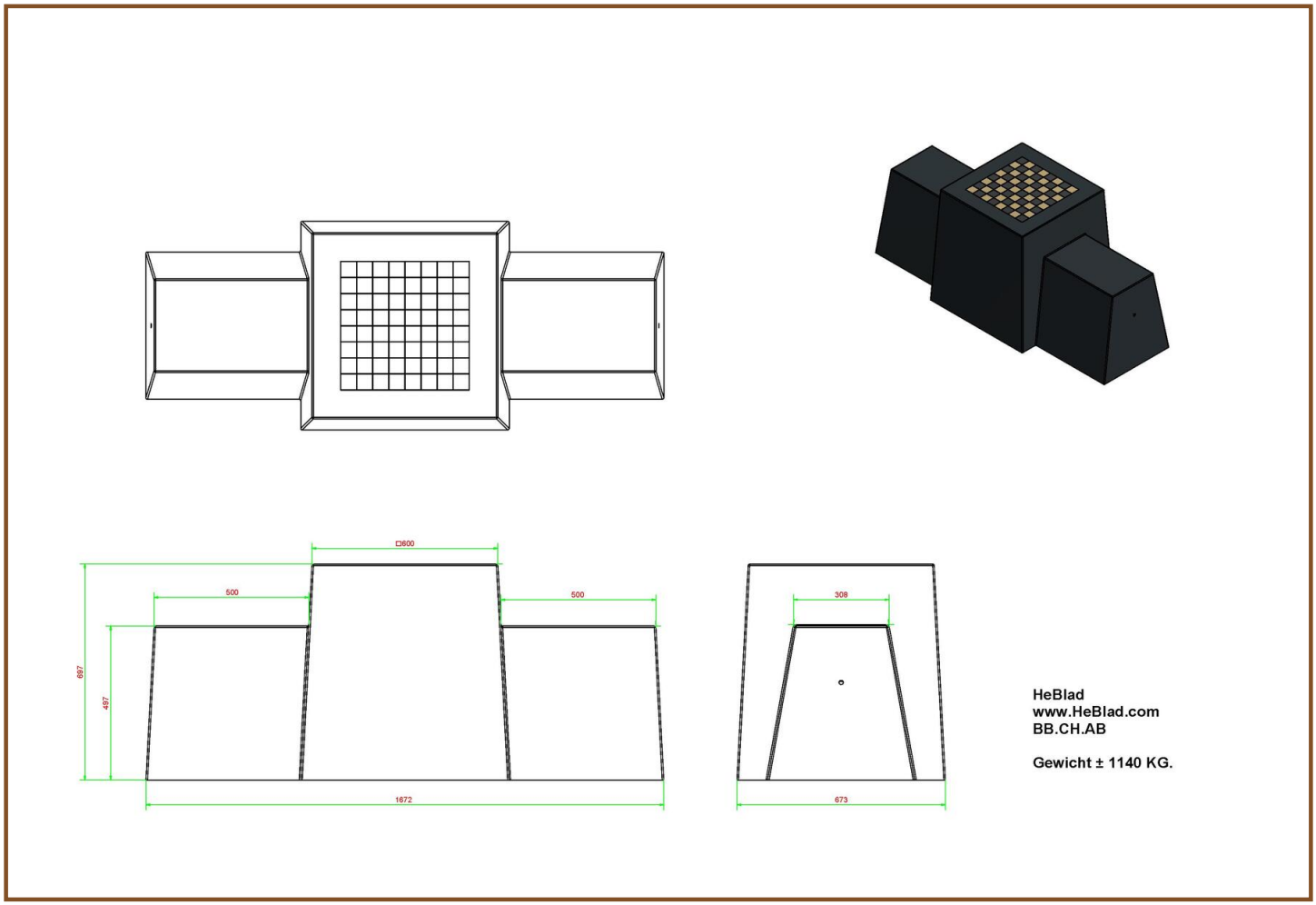

Specifications Chess Bench, Anthracite-Concrete

Product code	BB.CH.AB	Height tabletop	70 cm
Colour	Antraciet-beton	Weight	1140 kg
Dimensions (L x W x H)	167 x 67 x 70 cm	Number of seats	2
Seat height	50 cm		

Related products

BB.CH

BB.CK.AB

GT.CH.AB2

GT.CH.Pieces

Our products are delivered from our factory in the Netherlands.

correspondence address

HeBlad - UK
The Balance, 7th floor, Pinfold Street
S1 2GU Sheffield, South Yorkshire
T. 0114 352 0110
info@HeBlad.co.uk
www.HeBlad.co.uk

head office address

Checkers/Drafts Bench, Anthracite-Concrete

Product code: BB.CK.AB

£ 2,325.00 excl. VAT
(£ 2,790.00 incl. VAT)

A show-piece at squares, in parks, or in the middle of a city centre. A bench and a table with a tabletop for a checkers/drafts game . To play a game of fun or just sit back and relax.
Because of its weight and design, it is extremely suitable to use as ram raid protection. Made in Anthracite-Concrete.

* When ordering one draughts Bench you will receive 1 set of dams with it.

Our products are delivered from our factory in the Netherlands.

Registred under: HeBlad BV • HM Revenue and Customs • Ruby House 8 • Ruby Place • AB10 1ZP Aberdeen
VAT Number GB381060225 • EORI Number GB381060225000 • Commercial register (NL) 170 66 364
Rabobank De Kempen, Markt 7, 5531 BA Bladel (NL) • BIC RABONL2U • Branch code RABONL2UXXX • IBAN NL 20 RABO 0107530112 GBP

correspondence address

HeBlad - UK
The Balance, 7th floor, Pinfold Street
S1 2GU Sheffield, South Yorkshire
T. 0114 352 0110
info@HeBlad.co.uk
www.HeBlad.co.uk

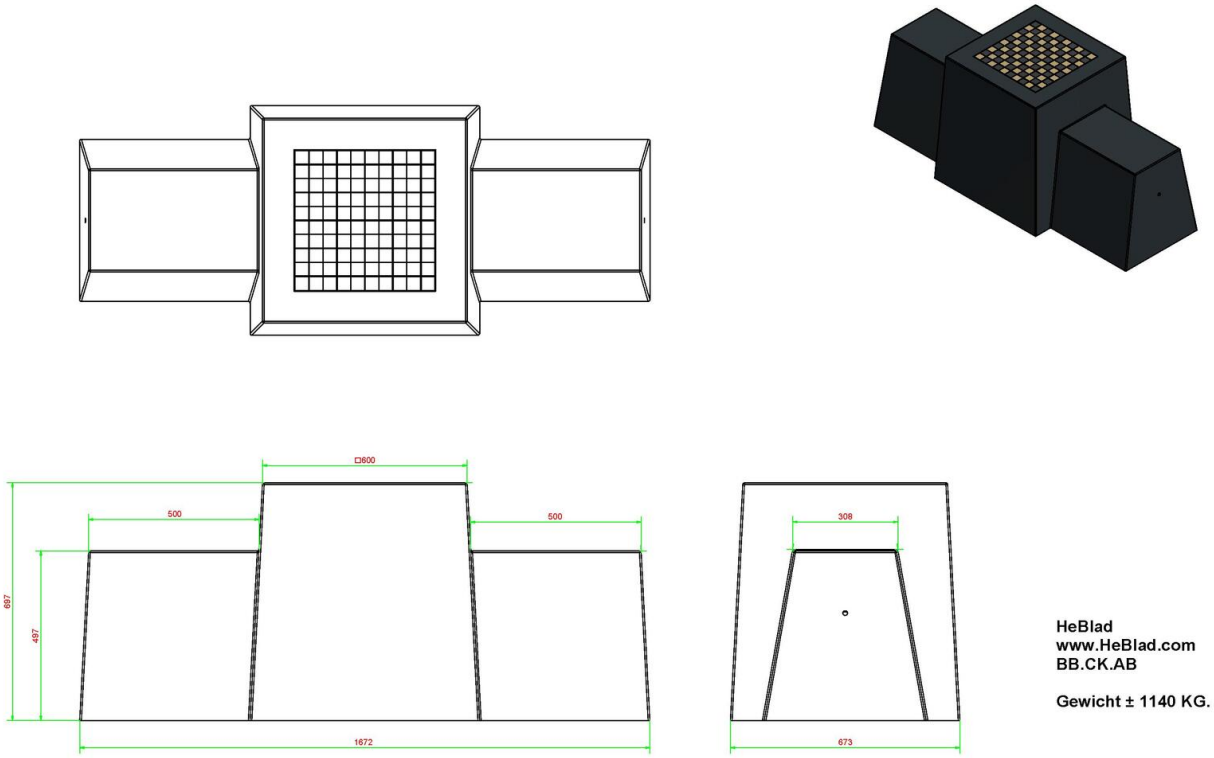

Specifications Checkers/Drafts Bench, Anthracite-Concrete

Product code	BB.CK.AB	Height tabletop	70 cm
Colour	Anthracite concrete	Weight	1140 kg
Dimensions (L x W x H)	167 x 67 x 70 cm	Number of seats	2
Seat height	50 cm		

Related products

BB.CK

BB.CH

GT.CK.AB2

GT.CK.Pieces

GT.CK.AB4

Our products are delivered from our factory in the Netherlands.

correspondence address

HeBlad - UK
The Balance, 7th floor, Pinfold Street
S1 2GU Sheffield, South Yorkshire
T. 0114 352 0110
info@HeBlad.co.uk
www.HeBlad.co.uk

head office address

Bottom plate for all brands of Benches Natural Concrete

Product code: OP.BB

This bottom plate (248 x 120 cm) is suitable to place under any bench in the public space. The thickness of the plate is 72 mm. Also, very useful to place under a concrete table football table

£ 1,600.00 excl. VAT
(£ 1,920.00 incl. VAT)

Our products are delivered from our factory in the Netherlands.

12 October 2024 - Prices subject to change

correspondence address

HeBlad - UK
The Balance, 7th floor, Pinfold Street
S1 2GU Sheffield, South Yorkshire
T. 0114 352 0110
info@HeBlad.co.uk
www.HeBlad.co.uk

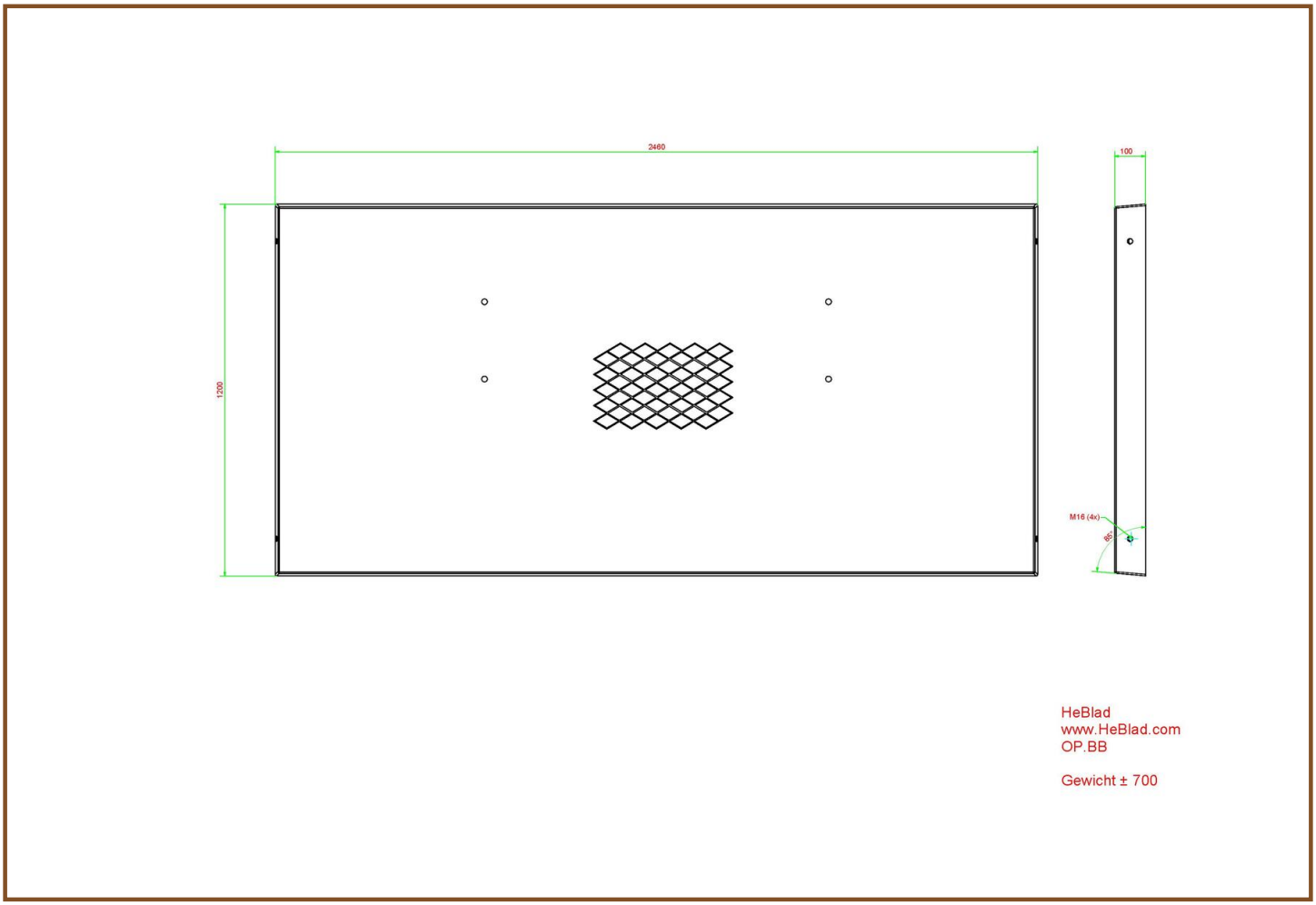

Specifications Bottom plate for all brands of Benches Natural Concrete

Product code	OP.BB	Weight	525 kg
Colour	Naturel beton	Finishing base plate	Anti-slip (window) profile
Dimensions (L x W x H)	248 x 120 x 7 cm	lifting device	Concrete screw sleeve M16

Related products

BB.DL.A

BB.DL.OV

PS.DL.A

HB.FB.A

PP.AR.GR

Our products are delivered from our factory in the Netherlands.

correspondence address

HeBlad - UK
The Balance, 7th floor, Pinfold Street
S1 2GU Sheffield, South Yorkshire
T. 0114 352 0110
info@HeBlad.co.uk
www.HeBlad.co.uk

head office address

Bottom plate for all brands of Benches Anthracite-Concrete

Product code: OP.BB.AB

£ 1,650.00 excl. VAT
(£ 1,980.00 incl. VAT)

This bottom plate (248 x 120 cm) is suitable to place under any bench in the public space. The thickness of the plate is 72 mm. This under-slab is of anthracite-coloured concrete.
Also, very useful to place under a concrete table football table

Our products are delivered from our factory in the Netherlands.

Registred under: HeBlad BV • HM Revenue and Customs • Ruby House 8 • Ruby Place • AB10 1ZP Aberdeen
VAT Number GB381060225 • EORI Number GB381060225000 • Commercial register (NL) 170 66 364
Rabobank De Kempen, Markt 7, 5531 BA Bladel (NL) • BIC RABONL2U • Branch code RABONL2UXXX • IBAN NL 20 RABO 0107530112 GBP

correspondence address

HeBlad - UK
The Balance, 7th floor, Pinfold Street
S1 2GU Sheffield, South Yorkshire
T. 0114 352 0110
info@HeBlad.co.uk
www.HeBlad.co.uk

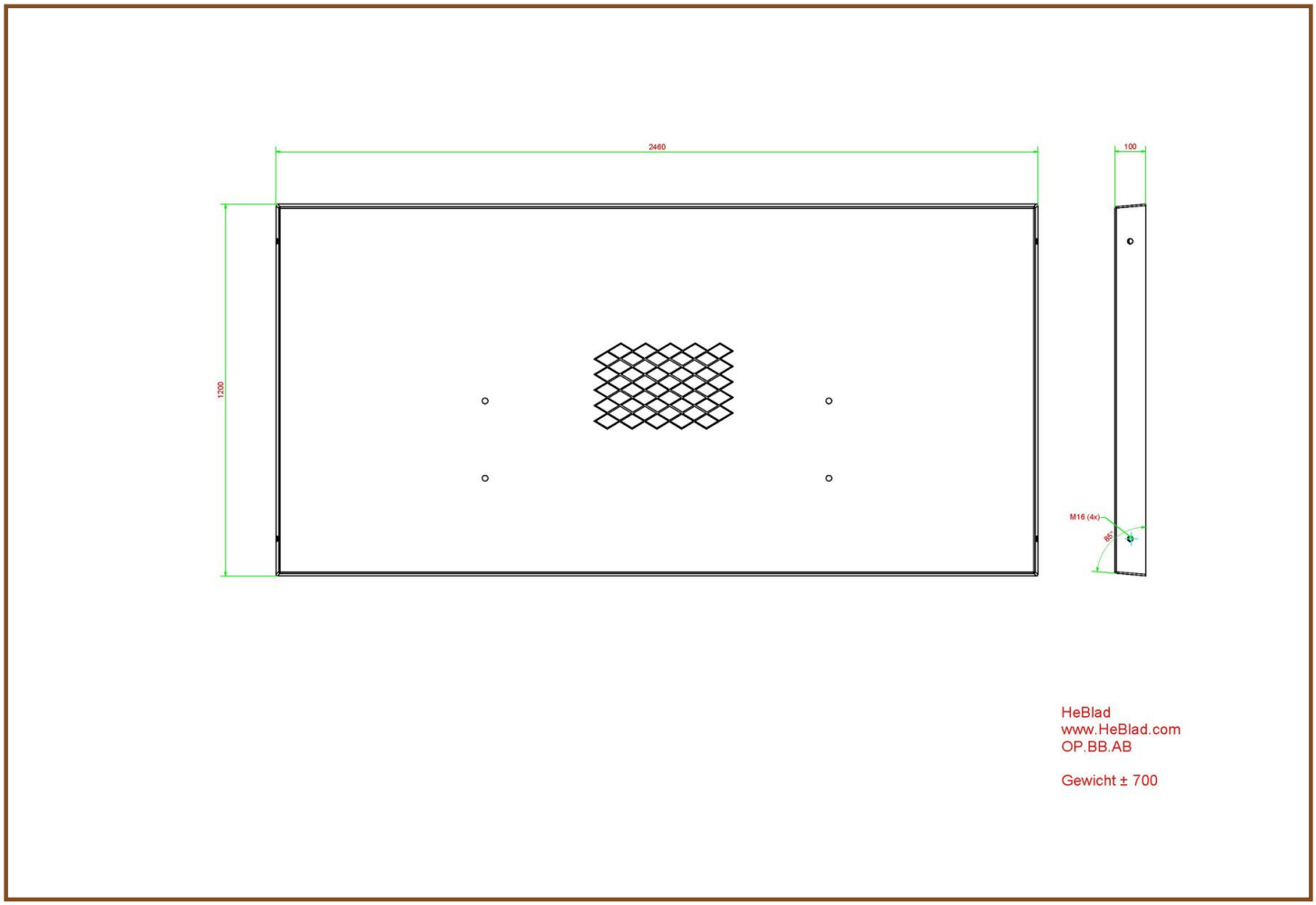

Specifications Bottom plate for all brands of Benches Anthracite-Concrete

Product code	OP.BB.AB	Weight	525 kg
Colour	Anthracite concrete	Finishing base plate	Anti-slip (window) profile
Dimensions (L x W x H)	248 x 120 x 7,2 cm	lifting device	Concrete screw sleeve M16

Related products

OP.BB

OP.PS.AB

BB.ST.A

BB.DLA.ML

BB.DLA.OV

Our products are delivered from our factory in the Netherlands.

correspondence address

HeBlad - UK
The Balance, 7th floor, Pinfold Street
S1 2GU Sheffield, South Yorkshire
T. 0114 352 0110
info@HeBlad.co.uk
www.HeBlad.co.uk

head office address

Plastic all-weather table tennis paddles in 4 colours

Product code: B.S1

£ 15.00 excl. VAT
(£ 18.00 incl. VAT)

These plastic tennis paddles or made for outdoor use and can withstand rough handling, and they are washable.

Packaging with 4 different colours: red, blue, yellow and green and 2 balls.

When ordering multiple products, the discount is automatically calculated in the quotation or order you make via the shopping basket.

If you order this product separately we will send it within 2 working days by mail.

In combination with a table tennis table, these sets are delivered simultaneously. In that case you will automatically receive a discount on this product.

Our products are delivered from our factory in the Netherlands.

Registred under: HeBlad BV • HM Revenue and Customs • Ruby House 8 • Ruby Place • AB10 1ZP Aberdeen
VAT Number GB381060225 • EORI Number GB381060225000 • Commercial register (NL) 170 66 364
Rabobank De Kempen, Markt 7, 5531 BA Bladel (NL) • BIC RABONL2U • Branch code RABONL2UXXX • IBAN NL 20 RABO 0107530112 GBP

correspondence address

HeBlad - UK
The Balance, 7th floor, Pinfold Street
S1 2GU Sheffield, South Yorkshire
T. 0114 352 0110
info@HeBlad.co.uk
www.HeBlad.co.uk

head office address

HeBlad BV
Diamantweg 22
NL - 5527 LC Hapert

Specifications Plastic all-weather table tennis paddles in 4 colours

Product code	B.S1
Material	Kunststof

Related products

PP.AR.GR

HB.FB.A

B.DS.SP

GT.CH.Pieces

HB.FB.Ball6

Our products are delivered from our factory in the Netherlands.

correspondence address

HeBlad - UK
The Balance, 7th floor, Pinfold Street
S1 2GU Sheffield, South Yorkshire
T. 0114 352 0110
info@HeBlad.co.uk
www.HeBlad.co.uk

head office address

Starter package table tennis bats & balls

Product code: B.DS.SP

£ 72.00 excl. VAT
(£ 86.40 incl. VAT)

Box with 100 ping-pong balls and 10 paddles in assorted red, yellow, blue and green.

The paddles are made of weather-proof plastic. Ideal for long-lasting use. The colours are very attractive to children.

With this starter package you are ready at all times.

When ordering multiple products, the discount is calculated automatically in the quotation or order that you make via the shopping basket.

If you order this product separately we will send it within 2 working days by mail. In combination with a table tennis table, these sets are delivered simultaneously. In that case you will automatically receive a discount on this product.

Our products are delivered from our factory in the Netherlands.

Registred under: HeBlad BV • HM Revenue and Customs • Ruby House 8 • Ruby Place • AB10 1ZP Aberdeen
VAT Number GB381060225 • EORI Number GB381060225000 • Commercial register (NL) 170 66 364
Rabobank De Kempen, Markt 7, 5531 BA Bladel (NL) • BIC RABONL2U • Branch code RABONL2UXXX • IBAN NL 20 RABO 0107530112 GBP

correspondence address

HeBlad - UK
The Balance, 7th floor, Pinfold Street
S1 2GU Sheffield, South Yorkshire
T. 0114 352 0110
info@HeBlad.co.uk
www.HeBlad.co.uk

head office address

HeBlad BV
Diamantweg 22
NL - 5527 LC Hapert

Specifications Starter package table tennis bats & balls

Product code	B.DS.SP
Material	Kunststof

Related products

PP.AR.BL

HB.FB.A

B.DS10

HB.FB.Ball6

Our products are delivered from our factory in the Netherlands.

correspondence address

HeBlad - UK
The Balance, 7th floor, Pinfold Street
S1 2GU Sheffield, South Yorkshire
T. 0114 352 0110
info@HeBlad.co.uk
www.HeBlad.co.uk

head office address

Bag with 6 ping-pong balls

Product code: B.Z6

£ 8.00 excl. VAT
(£ 9.60 incl. VAT)

Bag with 6 pig-pong balls.

These balls are of a good quality and are used by ping-pong clubs to practise with. Only available in white.

When ordering multiple products, the discount is calculated automatically in the quotation or order that you make via the shopping basket.

If you order this product separately we will send it within 2 working days by mail.

In combination with a table tennis table, these sets are delivered simultaneously. In that case you will automatically receive a discount on this product.

Our products are delivered from our factory in the Netherlands.

Registred under: HeBlad BV • HM Revenue and Customs • Ruby House 8 • Ruby Place • AB10 1ZP Aberdeen
VAT Number GB381060225 • EORI Number GB381060225000 • Commercial register (NL) 170 66 364
Rabobank De Kempen, Markt 7, 5531 BA Bladel (NL) • BIC RABONL2U • Branch code RABONL2UXXX • IBAN NL 20 RABO 0107530112 GBP

correspondence address

HeBlad - UK
The Balance, 7th floor, Pinfold Street
S1 2GU Sheffield, South Yorkshire
T. 0114 352 0110
info@HeBlad.co.uk
www.HeBlad.co.uk

head office address

HeBlad BV
Diamantweg 22
NL - 5527 LC Hapert

Specifications Bag with 6 ping-pong balls

Product code	B.Z6
Material	Kunststof

Related products

PP.R.GR

HB.FB.A

B.S1

HB.FB.Ball6

Our products are delivered from our factory in the Netherlands.

correspondence address

HeBlad - UK
The Balance, 7th floor, Pinfold Street
S1 2GU Sheffield, South Yorkshire
T. 0114 352 0110
info@HeBlad.co.uk
www.HeBlad.co.uk

head office address

Table tennis bats Pastel, set of 4

Product code: B.S1.pastel

£ 18.00 excl. VAT
(£ 21.60 incl. VAT)

Our products are delivered from our factory in the Netherlands.

13 October 2024 - Prices subject to change

correspondence address

HeBlad - UK
The Balance, 7th floor, Pinfold Street
S1 2GU Sheffield, South Yorkshire
T. 0114 352 0110
info@HeBlad.co.uk
www.HeBlad.co.uk

head office address

HeBlad BV
Diamantweg 22
NL - 5527 LC Hapert

Specifications Table tennis bats Pastel, set of 4

Product code	B.S1.pastel
Material	Kunststof

Related products

PP.AR.LOW.GR

PP.AR.LOW.BL

PP.AR.LOW.A

B.S1

B.DS10

Our products are delivered from our factory in the Netherlands.

correspondence address

HeBlad - UK
The Balance, 7th floor, Pinfold Street
S1 2GU Sheffield, South Yorkshire
T. 0114 352 0110
info@HeBlad.co.uk
www.HeBlad.co.uk

head office address

box with 10 sets of table tennis bats

Product code: B.DS10

£ 125.00 excl. VAT
(£ 150.00 incl. VAT)

This box contains 10 sets of table tennis bats, one set consists of four bats in different colors complete with two balls. In total there are 40 bats and 20 balls in the box.

The bats are made of a high quality plastic. Ideal for outdoor use. The bright colors very attractive for children.

Extremely suitable for reselling in the camping shop.

When ordering multiple products, the discount is calculated automatically in the quotation or order that you make via the shopping basket.

If you order this product separately we will send it within 2 working days by mail. In combination with a table tennis table, these sets are delivered simultaneously. In that case you will automatically receive a discount on this product.

Our products are delivered from our factory in the Netherlands.

Registred under: HeBlad BV • HM Revenue and Customs • Ruby House 8 • Ruby Place • AB10 1ZP Aberdeen
VAT Number GB381060225 • EORI Number GB381060225000 • Commercial register (NL) 170 66 364
Rabobank De Kempen, Markt 7, 5531 BA Bladel (NL) • BIC RABONL2U • Branch code RABONL2UXXX • IBAN NL 20 RABO 0107530112 GBP

correspondence address

HeBlad - UK
The Balance, 7th floor, Pinfold Street
S1 2GU Sheffield, South Yorkshire
T. 0114 352 0110
info@HeBlad.co.uk
www.HeBlad.co.uk

head office address

HeBlad BV
Diamantweg 22
NL - 5527 LC Hapert

Specifications box with 10 sets of table tennis bats

Product code	B.DS10
Material	Kunststof

Related products

PP.R.BL

HB.FB.A

HB.FB.Ball6

Our products are delivered from our factory in the Netherlands.

correspondence address

HeBlad - UK
The Balance, 7th floor, Pinfold Street
S1 2GU Sheffield, South Yorkshire
T. 0114 352 0110
info@HeBlad.co.uk
www.HeBlad.co.uk

head office address

Box of ping-pong balls packed per 100 pieces

Product code: B.DS100

£ 50.00 excl. VAT
(£ 60.00 incl. VAT)

Box with 100 ping-pong balls.

These balls are of a good quality and are used by ping-pong clubs to practice with. Ideal for large-scale users.

In case you only order this product, shipping costs will be charged.
In combination with one of the ping-pong tables these sets will be delivered without charge together with the tables, in case of a loose order the balls will be dispatched by post within 2 working days.

Our products are delivered from our factory in the Netherlands.

Registred under: HeBlad BV • HM Revenue and Customs • Ruby House 8 • Ruby Place • AB10 1ZP Aberdeen
VAT Number GB381060225 • EORI Number GB381060225000 • Commercial register (NL) 170 66 364
Rabobank De Kempen, Markt 7, 5531 BA Bladel (NL) • BIC RABONL2U • Branch code RABONL2UXXX • IBAN NL 20 RABO 0107530112 GBP

correspondence address

HeBlad - UK
The Balance, 7th floor, Pinfold Street
S1 2GU Sheffield, South Yorkshire
T. 0114 352 0110
info@HeBlad.co.uk
www.HeBlad.co.uk

head office address

HeBlad BV
Diamantweg 22
NL - 5527 LC Hapert

Specifications Box of ping-pong balls packed per 100 pieces

Product code	B.DS100
Material	Kunststof

Related products

PP.AR.AB

PP.BL

B.S1

B.DS.SP

Our products are delivered from our factory in the Netherlands.

correspondence address

HeBlad - UK
The Balance, 7th floor, Pinfold Street
S1 2GU Sheffield, South Yorkshire
T. 0114 352 0110
info@HeBlad.co.uk
www.HeBlad.co.uk

head office address

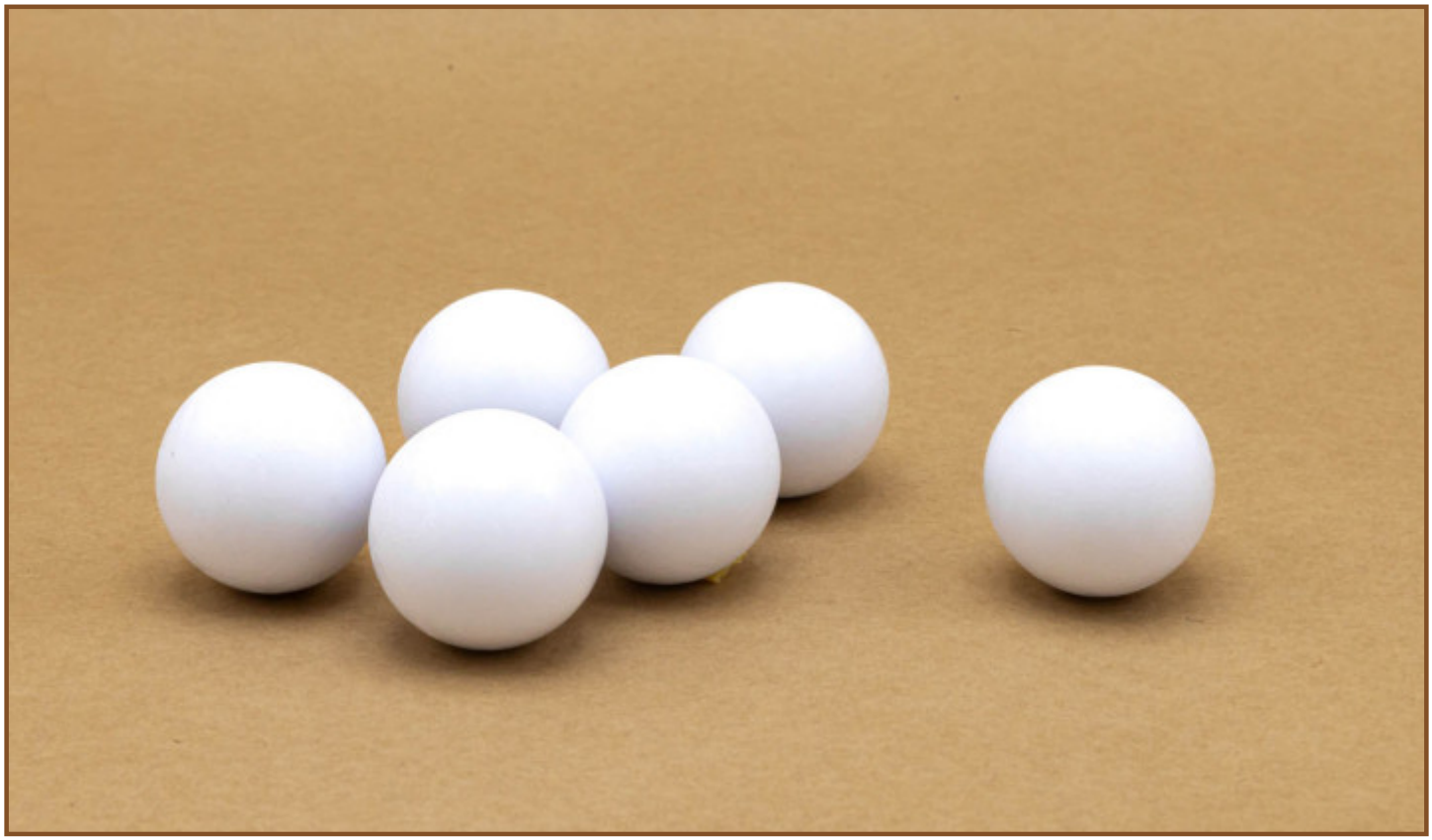

Set of 6 table football balls standard white

Product code: HB.FB.6White

£ 8.00 excl. VAT
(£ 9.60 incl. VAT)

Pouch with 6 table football balls. Hard white balls. Very suitable for starting players. This ball is much more difficult to trap underneath the playing figure, therefore the ball is kept rolling and keeps the play moving.

Our products are delivered from our factory in the Netherlands.

Registred under: HeBlad BV • HM Revenue and Customs • Ruby House 8 • Ruby Place • AB10 1ZP Aberdeen
VAT Number GB381060225 • EORI Number GB381060225000 • Commercial register (NL) 170 66 364
Rabobank De Kempen, Markt 7, 5531 BA Bladel (NL) • BIC RABONL2U • Branch code RABONL2UXXX • IBAN NL 20 RABO 0107530112 GBP

correspondence address

HeBlad - UK
The Balance, 7th floor, Pinfold Street
S1 2GU Sheffield, South Yorkshire
T. 0114 352 0110
info@HeBlad.co.uk
www.HeBlad.co.uk

head office address

HeBlad BV
Diamantweg 22
NL - 5527 LC Hapert

Specifications Set of 6 table football balls standard white

Product code	HB.FB.6White
Material	Kunststof

Related products

HB.FB.25White

HB.FB.A

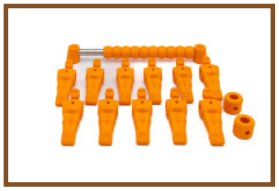
HB.FBSC.Orange

Our products are delivered from our factory in the Netherlands.

correspondence address

HeBlad - UK
The Balance, 7th floor, Pinfold Street
S1 2GU Sheffield, South Yorkshire
T. 0114 352 0110
info@HeBlad.co.uk
www.HeBlad.co.uk

head office address

Bag with 25 table football balls standard white

Product code: HB.FB.25White

£ 28.00 excl. VAT
(£ 33.60 incl. VAT)

Bulk packaging of 25 white footballs for the table football game. Hard white balls. Very suitable for starting players. This ball is much more difficult to trap underneath the playing figure, therefore the ball is kept rolling and keeps the play moving.

Our products are delivered from our factory in the Netherlands.

Registred under: HeBlad BV • HM Revenue and Customs • Ruby House 8 • Ruby Place • AB10 1ZP Aberdeen
VAT Number GB381060225 • EORI Number GB381060225000 • Commercial register (NL) 170 66 364
Rabobank De Kempen, Markt 7, 5531 BA Bladel (NL) • BIC RABONL2U • Branch code RABONL2UXXX • IBAN NL 20 RABO 0107530112 GBP

correspondence address

HeBlad - UK
The Balance, 7th floor, Pinfold Street
S1 2GU Sheffield, South Yorkshire
T. 0114 352 0110
info@HeBlad.co.uk
www.HeBlad.co.uk

head office address

HeBlad BV
Diamantweg 22
NL - 5527 LC Hapert

Specifications Bag with 25 table football balls standard white

Product code	HB.FB.25White
Material	Kunststof

Related products

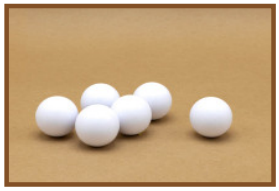
HB.FB.6White

HB.FB.Handle

HB.FB.Eye.set8

HB.FB.A

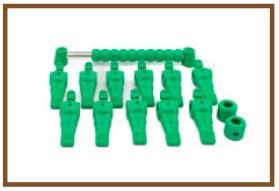
HB.FBSC.Green

Our products are delivered from our factory in the Netherlands.

correspondence address

HeBlad - UK
The Balance, 7th floor, Pinfold Street
S1 2GU Sheffield, South Yorkshire
T. 0114 352 0110
info@HeBlad.co.uk
www.HeBlad.co.uk

head office address

Single football figure available

Product code: HB.FB.DOLL

£ 6.00 excl. VAT
(£ 7.20 incl. VAT)

Table football figure suitable for a rotating bar with a diameter of 16mm. The figures are made of unbreakable synthetic material also undestroyable at temperatures below freezing point..

Available in 8 different colours. The soccer football figures can be ordered for a complete team. The set then consists of 11 players including fixing material also in 8 colours.

In case you already own a HeBlad table football table you easily can give the table a quite different look by e.g. changing the colour of the whole team or both teams completely including the scoreboard. Nice to change into your club colours. Look at some photos on our website to get more ideas.

Click here to see the strength of our football figure.

Our products are delivered from our factory in the Netherlands.

Registred under: HeBlad BV • HM Revenue and Customs • Ruby House 8 • Ruby Place • AB10 1ZP Aberdeen
VAT Number GB381060225 • EORI Number GB381060225000 • Commercial register (NL) 170 66 364
Rabobank De Kempen, Markt 7, 5531 BA Bladel (NL) • BIC RABONL2U • Branch code RABONL2UXXX • IBAN NL 20 RABO 0107530112 GBP

correspondence address

HeBlad - UK
The Balance, 7th floor, Pinfold Street
S1 2GU Sheffield, South Yorkshire
T. 0114 352 0110
info@HeBlad.co.uk
www.HeBlad.co.uk

head office address

HeBlad BV
Diamantweg 22
NL - 5527 LC Hapert

Specifications Single football figure available

Product code	HB.FB.DOLL
Material	Kunststof

Related products

HB.FB.A

PP.AR.GR

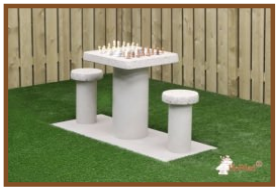
GT.CH.G2

HB.FB.Ball6

HB.FBP.Set

Our products are delivered from our factory in the Netherlands.

correspondence address

HeBlad - UK
The Balance, 7th floor, Pinfold Street
S1 2GU Sheffield, South Yorkshire
T. 0114 352 0110
info@HeBlad.co.uk
www.HeBlad.co.uk

head office address

Set of football players

Product code: HB.FBP.Set

£ 55.00 excl. VAT
(£ 66.00 incl. VAT)

Complete set of table football players. Consisting of 11 figures and two dampers to be placed on both sides of the goalkeeper. This set of players will be delivered completed with all necessary fixing material..

This set of players is suitable for any table football table with turning bars with a diameter of 16mm.

The material used is of high standard quality, the playing figures as well as the fixing material even resist salty sea air.

The figures are made of unbreakable synthetic material also undestroyable at temperatures below freezing point.

Click here and have a look at the strength of our figures shown in a test.

Our products are delivered from our factory in the Netherlands.

Registred under: HeBlad BV • HM Revenue and Customs • Ruby House 8 • Ruby Place • AB10 1ZP Aberdeen
VAT Number GB381060225 • EORI Number GB381060225000 • Commercial register (NL) 170 66 364
Rabobank De Kempen, Markt 7, 5531 BA Bladel (NL) • BIC RABONL2U • Branch code RABONL2UXXX • IBAN NL 20 RABO 0107530112 GBP

correspondence address

HeBlad - UK
The Balance, 7th floor, Pinfold Street
S1 2GU Sheffield, South Yorkshire
T. 0114 352 0110
info@HeBlad.co.uk
www.HeBlad.co.uk

head office address

HeBlad BV
Diamantweg 22
NL - 5527 LC Hapert

Specifications Set of football players

Product code	HB.FBP.Set
Material	Kunststof

Related products

HB.FB.A

PP.AR.BL

HB.FB.Ball6

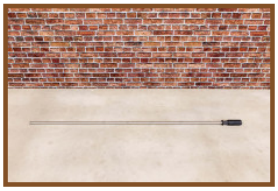
HB.FB.Rod

Our products are delivered from our factory in the Netherlands.

correspondence address

HeBlad - UK
The Balance, 7th floor, Pinfold Street
S1 2GU Sheffield, South Yorkshire
T. 0114 352 0110
info@HeBlad.co.uk
www.HeBlad.co.uk

head office address

Set of kickers with scoreboard

Product code: HB.FBSC.set

£ 79.00 excl. VAT
(£ 94.80 incl. VAT)

In case you are already owner of a table football game from HeBlad, then it is possible to change the look of the table completely by changing the colour of the figures and scoreboard.

A winning idea is e.g. to use the colours of a local football club. You have a choice of 8 different colours.

The sets will be delivered completely with fixing material. You easily change the figures and scoreboard with the attached hex key.

If you want to order a replacement of your figures of a different brand of football table with HeBlad players, you have to make sure that the turning bars and the bar of the scoreboard both have a diameter of 16mm.

Our products are delivered from our factory in the Netherlands.

Registred under: HeBlad BV • HM Revenue and Customs • Ruby House 8 • Ruby Place • AB10 1ZP Aberdeen
VAT Number GB381060225 • EORI Number GB381060225000 • Commercial register (NL) 170 66 364
Rabobank De Kempen, Markt 7, 5531 BA Bladel (NL) • BIC RABONL2U • Branch code RABONL2UXXX • IBAN NL 20 RABO 0107530112 GBP

correspondence address

HeBlad - UK
The Balance, 7th floor, Pinfold Street
S1 2GU Sheffield, South Yorkshire
T. 0114 352 0110
info@HeBlad.co.uk
www.HeBlad.co.uk

head office address

HeBlad BV
Diamantweg 22
NL - 5527 LC Hapert

Specifications Set of kickers with scoreboard

Product code	HB.FBSC.set
Material	Kunststof

Related products

HB.FB.A

PP.AR.GR

HB.FB.Ball6

HB.FB.DOLL

Our products are delivered from our factory in the Netherlands.

correspondence address

HeBlad - UK
The Balance, 7th floor, Pinfold Street
S1 2GU Sheffield, South Yorkshire
T. 0114 352 0110
info@HeBlad.co.uk
www.HeBlad.co.uk

head office address

Handle

Product code: HB.FB.Handle

£ 3.00 excl. VAT
(£ 3.60 incl. VAT)

Our products are delivered from our factory in the Netherlands.

Registred under: HeBlad BV • HM Revenue and Customs • Ruby House 8 • Ruby Place • AB10 1ZP Aberdeen
VAT Number GB381060225 • EORI Number GB381060225000 • Commercial register (NL) 170 66 364
Rabobank De Kempen, Markt 7, 5531 BA Bladel (NL) • BIC RABONL2U • Branch code RABONL2UXXX • IBAN NL 20 RABO 0107530112 GBP

correspondence address

HeBlad - UK
The Balance, 7th floor, Pinfold Street
S1 2GU Sheffield, South Yorkshire
T. 0114 352 0110
info@HeBlad.co.uk
www.HeBlad.co.uk

head office address

HeBlad BV
Diamantweg 22
NL - 5527 LC Hapert

Specifications Handle

Product code	HB.FB.Handle
Material	Rubber

Related products

HB.FB.A

PP.AR.BL

HB.FB.Ball6

HB.FB.DOLL

Our products are delivered from our factory in the Netherlands.

correspondence address

HeBlad - UK
The Balance, 7th floor, Pinfold Street
S1 2GU Sheffield, South Yorkshire
T. 0114 352 0110
info@HeBlad.co.uk
www.HeBlad.co.uk

head office address

Handle, set of 8

Product code: HB.FB.Handleset

£ 20.00 excl. VAT
(£ 24.00 incl. VAT)

Our products are delivered from our factory in the Netherlands.

Registred under: HeBlad BV • HM Revenue and Customs • Ruby House 8 • Ruby Place • AB10 1ZP Aberdeen
VAT Number GB381060225 • EORI Number GB381060225000 • Commercial register (NL) 170 66 364
Rabobank De Kempen, Markt 7, 5531 BA Bladel (NL) • BIC RABONL2U • Branch code RABONL2UXXX • IBAN NL 20 RABO 0107530112 GBP

correspondence address

HeBlad - UK
The Balance, 7th floor, Pinfold Street
S1 2GU Sheffield, South Yorkshire
T. 0114 352 0110
info@HeBlad.co.uk
www.HeBlad.co.uk

head office address

HeBlad BV
Diamantweg 22
NL - 5527 LC Hapert

Specifications Handle, set of 8

Product code	HB.FB.Handleset
Material	Rubber

Our products are delivered from our factory in the Netherlands.

correspondence address

HeBlad - UK
The Balance, 7th floor, Pinfold Street
S1 2GU Sheffield, South Yorkshire
T. 0114 352 0110
info@HeBlad.co.uk
www.HeBlad.co.uk

head office address

Table football rod

Product code: HB.FB.Rod

£ 50.00 excl. VAT
(£ 60.00 incl. VAT)

Solid bar of stainless steel 316L for table football. The rod has prepared holes.
The rods are not equal in length and number of holes, therefore it is essential to make the right choice.
You also can order a complete set of 8.

Our products are delivered from our factory in the Netherlands.

Registred under: HeBlad BV • HM Revenue and Customs • Ruby House 8 • Ruby Place • AB10 1ZP Aberdeen
VAT Number GB381060225 • EORI Number GB381060225000 • Commercial register (NL) 170 66 364
Rabobank De Kempen, Markt 7, 5531 BA Bladel (NL) • BIC RABONL2U • Branch code RABONL2UXXX • IBAN NL 20 RABO 0107530112 GBP

correspondence address

HeBlad - UK
The Balance, 7th floor, Pinfold Street
S1 2GU Sheffield, South Yorkshire
T. 0114 352 0110
info@HeBlad.co.uk
www.HeBlad.co.uk

head office address

HeBlad BV
Diamantweg 22
NL - 5527 LC Hapert

Specifications Table football rod

Product code	HB.FB.Rod
Material	Roestvrij staal, rubber

Related products

HB.FB.A

PP.R.BL

GT.CK.G4

HB.FB.Ball6

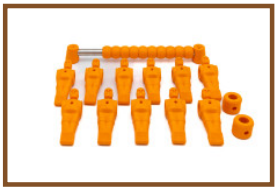
HB.FBSC.set

Our products are delivered from our factory in the Netherlands.

correspondence address

HeBlad - UK
The Balance, 7th floor, Pinfold Street
S1 2GU Sheffield, South Yorkshire
T. 0114 352 0110
info@HeBlad.co.uk
www.HeBlad.co.uk

head office address

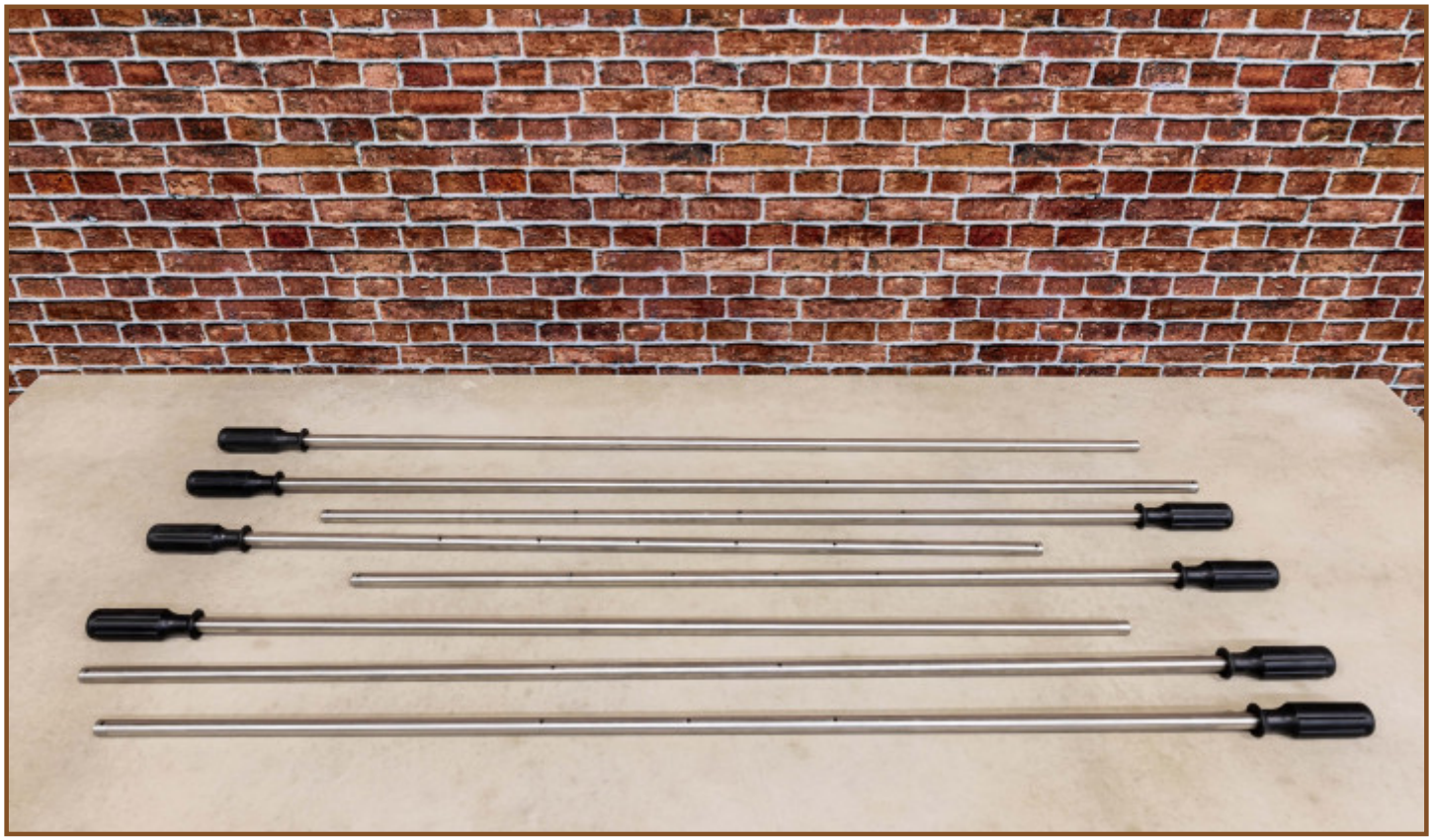

Stainless steel rods for football game, set of 8.

Product code: HB.FB.Rodset

£ 375.00 excl. VAT
(£ 450.00 incl. VAT)

In case you want to refurbish your HeBlad table football with new rods, you can order a complete new set of solid stainless steel rods. This set consists of 8 rods each 16mm: 2 rods with 2 holes (suitable for the defender), 4 rods with 3 holes (suitable for attacker and keeper), 2 rods with 5 holes (suitable for midfielder). The rods are of solid stainless steel, salt-resistant.

Our products are delivered from our factory in the Netherlands.

Registred under: HeBlad BV • HM Revenue and Customs • Ruby House 8 • Ruby Place • AB10 1ZP Aberdeen
VAT Number GB381060225 • EORI Number GB381060225000 • Commercial register (NL) 170 66 364
Rabobank De Kempen, Markt 7, 5531 BA Bladel (NL) • BIC RABONL2U • Branch code RABONL2UXXX • IBAN NL 20 RABO 0107530112 GBP

correspondence address

HeBlad - UK
The Balance, 7th floor, Pinfold Street
S1 2GU Sheffield, South Yorkshire
T. 0114 352 0110
info@HeBlad.co.uk
www.HeBlad.co.uk

head office address

HeBlad BV
Diamantweg 22
NL - 5527 LC Hapert

Specifications Stainless steel rods for football game, set of 8.

Product code	HB.FB.Rodset
Material	Roestvrij staal, rubber

Related products

HB.FB.A

PP.R.GR

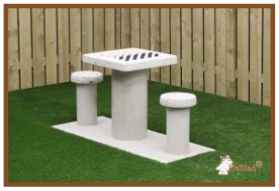
GT.CK.G2

HB.FB.Ball6

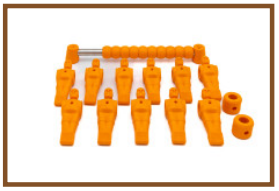
HB.FBSC.set

Our products are delivered from our factory in the Netherlands.

correspondence address

HeBlad - UK
The Balance, 7th floor, Pinfold Street
S1 2GU Sheffield, South Yorkshire
T. 0114 352 0110
info@HeBlad.co.uk
www.HeBlad.co.uk

head office address

Rubber damper

Product code: HB.FB.bumper

£ 2.75 excl. VAT
(£ 3.30 incl. VAT)

These dampers are at the end of the rods between the playing figures and the sidewall of the frame. The holes of the dampers measure 15mm and therefore will fit very tight around the rod of 16mm.

We have chosen rubber instead of steel springs, because our tables are intended for the outside. Rubber is much more resistant to all different weather conditions and in addition to that a game with HeBlad table football makes less noise through the use of rubber.

This product can be ordered as a complete set of 16 pieces, very handy if you want change all rubbers of the table.

Note: In order to slide the dampers over the rods, the players have to be removed first, to do this you need a hex key of 2.5 mm, which you can order on our site as well.

Our products are delivered from our factory in the Netherlands.

Registred under: HeBlad BV • HM Revenue and Customs • Ruby House 8 • Ruby Place • AB10 1ZP Aberdeen
VAT Number GB381060225 • EORI Number GB381060225000 • Commercial register (NL) 170 66 364
Rabobank De Kempen, Markt 7, 5531 BA Bladel (NL) • BIC RABONL2U • Branch code RABONL2UXXX • IBAN NL 20 RABO 0107530112 GBP

correspondence address

HeBlad - UK
The Balance, 7th floor, Pinfold Street
S1 2GU Sheffield, South Yorkshire
T. 0114 352 0110
info@HeBlad.co.uk
www.HeBlad.co.uk

head office address

HeBlad BV
Diamantweg 22
NL - 5527 LC Hapert

Specifications Rubber damper

Product code	HB.FB.bumper
Material	Rubber

Related products

HB.FB.A

PP.AR.GR

HB.FB.Ball6

HB.FB.DOLL

Our products are delivered from our factory in the Netherlands.

correspondence address

HeBlad - UK
The Balance, 7th floor, Pinfold Street
S1 2GU Sheffield, South Yorkshire
T. 0114 352 0110
info@HeBlad.co.uk
www.HeBlad.co.uk

head office address

Set of rubber dampers for football table, 16 pcs.

Product code: HB.FB.Bumperset

£ 35.00 excl. VAT
(£ 42.00 incl. VAT)

This replacement set of 16 dampers for a football table is applicable for football rods of 16 mm. HeBlad uses these rubber dampers instead of steel springs for their concrete outdoor football tables.

Note: In order to slide the dampers over the rods, the players have to be removed first, to do this you need a hex key of 2.5 mm, which you can order on our site as well.

Our products are delivered from our factory in the Netherlands.

Registred under: HeBlad BV • HM Revenue and Customs • Ruby House 8 • Ruby Place • AB10 1ZP Aberdeen
VAT Number GB381060225 • EORI Number GB381060225000 • Commercial register (NL) 170 66 364
Rabobank De Kempen, Markt 7, 5531 BA Bladel (NL) • BIC RABONL2U • Branch code RABONL2UXXX • IBAN NL 20 RABO 0107530112 GBP

correspondence address

HeBlad - UK
The Balance, 7th floor, Pinfold Street
S1 2GU Sheffield, South Yorkshire
T. 0114 352 0110
info@HeBlad.co.uk
www.HeBlad.co.uk

head office address

HeBlad BV
Diamantweg 22
NL - 5527 LC Hapert

Specifications Set of rubber dampers for football table, 16 pcs.

Product code	HB.FB.Bumperset
Material	Rubber

Related products

HB.FB.A

PP.AR.BL

GT.CK.G4

HB.FB.Ball6

HB.FB.DOLL

Our products are delivered from our factory in the Netherlands.

correspondence address

HeBlad - UK
The Balance, 7th floor, Pinfold Street
S1 2GU Sheffield, South Yorkshire
T. 0114 352 0110
info@HeBlad.co.uk
www.HeBlad.co.uk

head office address

Allen wrench of 2.5 mm

Product code: HB.FB.Inbus25

£ 3.00 excl. VAT
(£ 3.60 incl. VAT)

This size of hex key you need for changing the football players. This key is free with a new football table.
Also with a set of playing figures (11 players plus 2 dampers) this key is included.

In case you want to replace the bumpers, you need to remove the football players in order to slide the bumpers over the rods. If you lost the hex key, you can order a new one together with the bumpers.

Our products are delivered from our factory in the Netherlands.

Registred under: HeBlad BV • HM Revenue and Customs • Ruby House 8 • Ruby Place • AB10 1ZP Aberdeen
VAT Number GB381060225 • EORI Number GB381060225000 • Commercial register (NL) 170 66 364
Rabobank De Kempen, Markt 7, 5531 BA Bladel (NL) • BIC RABONL2U • Branch code RABONL2UXXX • IBAN NL 20 RABO 0107530112 GBP

correspondence address

HeBlad - UK
The Balance, 7th floor, Pinfold Street
S1 2GU Sheffield, South Yorkshire
T. 0114 352 0110
info@HeBlad.co.uk
www.HeBlad.co.uk

head office address

HeBlad BV
Diamantweg 22
NL - 5527 LC Hapert

Specifications Allen wrench of 2.5 mm

Product code	HB.FB.Inbus25

Related products

HB.FB.A

PP.AR.GR

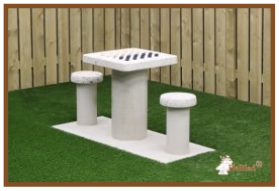
GT.CK.G2

HB.FB.Ball6

HB.FB.DOLL

Our products are delivered from our factory in the Netherlands.

correspondence address

HeBlad - UK
The Balance, 7th floor, Pinfold Street
S1 2GU Sheffield, South Yorkshire
T. 0114 352 0110
info@HeBlad.co.uk
www.HeBlad.co.uk

head office address

Allen key 4 mm

Product code: HB.FB.Inbus40

£ 4.00 excl. VAT
(£ 4.80 incl. VAT)

You need this size of hex key to exchange the scoreboard on the concrete football table. This key is included with an order of a new football table.
Also with an order of a new scoreboard or a set of playing figures we supply this key free of charge.

Our products are delivered from our factory in the Netherlands.

Registred under: HeBlad BV • HM Revenue and Customs • Ruby House 8 • Ruby Place • AB10 1ZP Aberdeen
VAT Number GB381060225 • EORI Number GB381060225000 • Commercial register (NL) 170 66 364
Rabobank De Kempen, Markt 7, 5531 BA Bladel (NL) • BIC RABONL2U • Branch code RABONL2UXXX • IBAN NL 20 RABO 0107530112 GBP

correspondence address

HeBlad - UK
The Balance, 7th floor, Pinfold Street
S1 2GU Sheffield, South Yorkshire
T. 0114 352 0110
info@HeBlad.co.uk
www.HeBlad.co.uk

head office address

HeBlad BV
Diamantweg 22
NL - 5527 LC Hapert

Specifications Allen key 4 mm

Product code	HB.FB.Inbus40

Related products

HB.FB.A

PP.R.BL

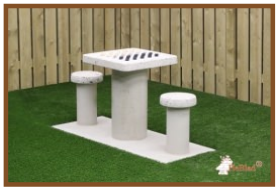
GT.CK.G2

HB.FB.Ball6

HB.FB.DOLL

Our products are delivered from our factory in the Netherlands.

correspondence address

HeBlad - UK
The Balance, 7th floor, Pinfold Street
S1 2GU Sheffield, South Yorkshire
T. 0114 352 0110
info@HeBlad.co.uk
www.HeBlad.co.uk

head office address

Set of chessmen

Product code: GT.CH.Pieces

£ 19.00 excl. VAT
(£ 22.80 incl. VAT)

Set of chess pieces. This set of 2 x 16 pieces is made of wood in the colours of white and brown.
This pieces will be delivered without charge with an order of HeBlad concrete chess table.

Delivery of this product requires shipping costs.

The height of the king is 3.5 inches.
The bottom is fixed with felt.

Our products are delivered from our factory in the Netherlands.

Registred under: HeBlad BV • HM Revenue and Customs • Ruby House 8 • Ruby Place • AB10 1ZP Aberdeen
VAT Number GB381060225 • EORI Number GB381060225000 • Commercial register (NL) 170 66 364
Rabobank De Kempen, Markt 7, 5531 BA Bladel (NL) • BIC RABONL2U • Branch code RABONL2UXXX • IBAN NL 20 RABO 0107530112 GBP

correspondence address

HeBlad - UK
The Balance, 7th floor, Pinfold Street
S1 2GU Sheffield, South Yorkshire
T. 0114 352 0110
info@HeBlad.co.uk
www.HeBlad.co.uk

head office address

HeBlad BV
Diamantweg 22
NL - 5527 LC Hapert

Specifications Set of chessmen

Product code	GT.CH.Pieces
Material	Hout
King height	7,7 cm

Related products

GT.CH.G4

HB.FB.A

BB.CH

GT.CH.AB2

Our products are delivered from our factory in the Netherlands.

correspondence address

HeBlad - UK
The Balance, 7th floor, Pinfold Street
S1 2GU Sheffield, South Yorkshire
T. 0114 352 0110
info@HeBlad.co.uk
www.HeBlad.co.uk

head office address

Set of checkers/drafts

Product code: GT.CK.Pieces

£ 12.00 excl. VAT
(£ 14.40 incl. VAT)

Our products are delivered from our factory in the Netherlands.

13 October 2024 - Prices subject to change

correspondence address

HeBlad - UK
The Balance, 7th floor, Pinfold Street
S1 2GU Sheffield, South Yorkshire
T. 0114 352 0110
info@HeBlad.co.uk
www.HeBlad.co.uk

head office address

HeBlad BV
Diamantweg 22
NL - 5527 LC Hapert

Specifications Set of checkers/drafts

Product code	GT.CK.Pieces
Material	Hout

Related products

GT.CK.AB2

GT.CK.AB4

HB.FB.A

BB.CK

Our products are delivered from our factory in the Netherlands.

correspondence address

HeBlad - UK
The Balance, 7th floor, Pinfold Street
S1 2GU Sheffield, South Yorkshire
T. 0114 352 0110
info@HeBlad.co.uk
www.HeBlad.co.uk

head office address

Set of pawns with a dice

Product code: GT.LD.Pieces

£ 10.00 excl. VAT
(£ 12.00 incl. VAT)

Our products are delivered from our factory in the Netherlands.

Registred under: HeBlad BV • HM Revenue and Customs • Ruby House 8 • Ruby Place • AB10 1ZP Aberdeen
VAT Number GB381060225 • EORI Number GB381060225000 • Commercial register (NL) 170 66 364
Rabobank De Kempen, Markt 7, 5531 BA Bladel (NL) • BIC RABONL2U • Branch code RABONL2UXXX • IBAN NL 20 RABO 0107530112 GBP

correspondence address

HeBlad - UK
The Balance, 7th floor, Pinfold Street
S1 2GU Sheffield, South Yorkshire
T. 0114 352 0110
info@HeBlad.co.uk
www.HeBlad.co.uk

head office address

HeBlad BV
Diamantweg 22
NL - 5527 LC Hapert

Specifications Set of pawns with a dice

Product code	GT.LD.Pieces
Material	Hout
Height pawns	3 cm

Our products are delivered from our factory in the Netherlands.

correspondence address

HeBlad - UK
The Balance, 7th floor, Pinfold Street
S1 2GU Sheffield, South Yorkshire
T. 0114 352 0110
info@HeBlad.co.uk
www.HeBlad.co.uk

head office address

Backgammon stones and dice

Product code: GT.BG.pieces

£ 12.00 excl. VAT
(£ 14.40 incl. VAT)

Our products are delivered from our factory in the Netherlands.

Registred under: HeBlad BV • HM Revenue and Customs • Ruby House 8 • Ruby Place • AB10 1ZP Aberdeen
VAT Number GB381060225 • EORI Number GB381060225000 • Commercial register (NL) 170 66 364
Rabobank De Kempen, Markt 7, 5531 BA Bladel (NL) • BIC RABONL2U • Branch code RABONL2UXXX • IBAN NL 20 RABO 0107530112 GBP

correspondence address

HeBlad - UK
The Balance, 7th floor, Pinfold Street
S1 2GU Sheffield, South Yorkshire
T. 0114 352 0110
info@HeBlad.co.uk
www.HeBlad.co.uk

head office address

HeBlad BV
Diamantweg 22
NL - 5527 LC Hapert

Specifications Backgammon stones and dice

Product code	GT.BG.pieces
Material	Kunststof

Our products are delivered from our factory in the Netherlands.

correspondence address

HeBlad - UK
The Balance, 7th floor, Pinfold Street
S1 2GU Sheffield, South Yorkshire
T. 0114 352 0110
info@HeBlad.co.uk
www.HeBlad.co.uk

head office address

Eye protector for rods

Product code: HB.FB.eye

£ 5.00 excl. VAT
(£ 6.00 incl. VAT)

Our products are delivered from our factory in the Netherlands.

12 October 2024 - Prices subject to change

correspondence address

HeBlad - UK
The Balance, 7th floor, Pinfold Street
S1 2GU Sheffield, South Yorkshire
T. 0114 352 0110
info@HeBlad.co.uk
www.HeBlad.co.uk

head office address

HeBlad BV
Diamantweg 22
NL - 5527 LC Hapert

Specifications Eye protector for rods

Product code	HB.FB.eye
Material	Rubber

Related products

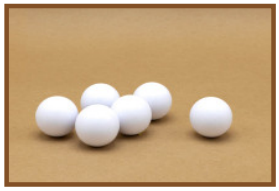
HB.FB.6White

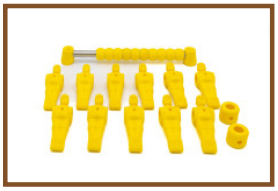
HB.FBSC.Yellow

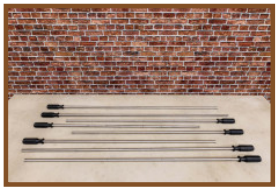
HB.FB.Rodset

HB.FBP.Blue

HB.FB.DOLL.Purp

Our products are delivered from our factory in the Netherlands.

correspondence address

HeBlad - UK
The Balance, 7th floor, Pinfold Street
S1 2GU Sheffield, South Yorkshire
T. 0114 352 0110
info@HeBlad.co.uk
www.HeBlad.co.uk

head office address

Eyeprotectors set of 8 pieces.

Product code: HB.FB.Eye.set8

£ 35.00 excl. VAT
(£ 42.00 incl. VAT)

Eyeprotectors set of 8 pieces.

Our products are delivered from our factory in the Netherlands.

Registred under: HeBlad BV • HM Revenue and Customs • Ruby House 8 • Ruby Place • AB10 1ZP Aberdeen
VAT Number GB381060225 • EORI Number GB381060225000 • Commercial register (NL) 170 66 364
Rabobank De Kempen, Markt 7, 5531 BA Bladel (NL) • BIC RABONL2U • Branch code RABONL2UXXX • IBAN NL 20 RABO 0107530112 GBP

correspondence address

HeBlad - UK
The Balance, 7th floor, Pinfold Street
S1 2GU Sheffield, South Yorkshire
T. 0114 352 0110
info@HeBlad.co.uk
www.HeBlad.co.uk

head office address

HeBlad BV
Diamantweg 22
NL - 5527 LC Hapert

Specifications Eyeprotectors set of 8 pieces.

Product code	HB.FB.Eye.set8
Material	Rubber

Related products

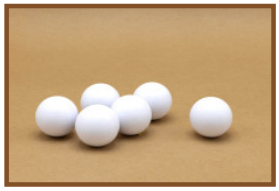
HB.FB.6White

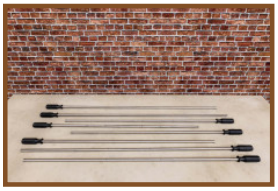
HB.FB.Rodset

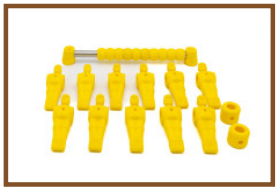
HB.FBSC.Yellow

HB.FB.DOLL.Purp

HB.FBP.Blue

Our products are delivered from our factory in the Netherlands.

correspondence address

HeBlad - UK
The Balance, 7th floor, Pinfold Street
S1 2GU Sheffield, South Yorkshire
T. 0114 352 0110
info@HeBlad.co.uk
www.HeBlad.co.uk

head office address

Anchoring set HeBlad Tables

Product code: HB.VS

£ 100.00 excl. VAT
(£ 120.00 incl. VAT)

Our products are delivered from our factory in the Netherlands.

13 October 2024 - Prices subject to change

correspondence address

HeBlad - UK
The Balance, 7th floor, Pinfold Street
S1 2GU Sheffield, South Yorkshire
T. 0114 352 0110
info@HeBlad.co.uk
www.HeBlad.co.uk

head office address

HeBlad BV
Diamantweg 22
NL - 5527 LC Hapert

Specifications Anchoring set HeBlad Tables

Product code	HB.VS

Related products

PP.AR.BL

PS.DLA.OV

HB.FB.A

PS.ST

PP.R.NT

Our products are delivered from our factory in the Netherlands.

correspondence address

HeBlad - UK
The Balance, 7th floor, Pinfold Street
S1 2GU Sheffield, South Yorkshire
T. 0114 352 0110
info@HeBlad.co.uk
www.HeBlad.co.uk

head office address

1 liter anthracite paint

Product code: HB.Paint-7016

£ 60.00 excl. VAT
(£ 72.00 incl. VAT)

Our products are delivered from our factory in the Netherlands.

12 October 2024 - Prices subject to change

correspondence address

HeBlad - UK
The Balance, 7th floor, Pinfold Street
S1 2GU Sheffield, South Yorkshire
T. 0114 352 0110
info@HeBlad.co.uk
www.HeBlad.co.uk

head office address

HeBlad BV
Diamantweg 22
NL - 5527 LC Hapert

Specifications 1 liter anthracite paint

Product code	HB.Paint-7016

Our products are delivered from our factory in the Netherlands.